STI MANUFACTURING, INC.

Thermocouples

RTDs

Thermowells

Multi-point Reactor Assemblies

Instrumentation

STI MANUFACTURING, INC.

LINE SHEET

STI:

THERMOCOUPLES
RTDs
THERMOWELLS
MULTI-POINT ASSEMBLIES
THERMOCOUPLE WIRE
EXTENSION WIRE

FLOW PRODUCTS:

ORIFICE PLATES	ORIFICE UNIONS
METER TUBES	FLOW NOZZLES
VENTURIES	BLINDS
STRAIGHTING VANES	
RESTRICTION UNIONS	

REOTEMP:

BI-METALLIC THERMOMETERS	REMOTE MOUNT THERMOMETERS

CONTROLS SYSTEMS:

DIGITAL TEMPERATURE INDICATORS	MINI HAND-HELD INDICATORS
PROGRAMMABLE TEMPERATURE CONTROLLERS	CALIBRATORS
DATA LOGGERS	CURRENT CALIBRATORS
CALIBRATION CHECKERS	HUMIDITY INDICATORS
TEMPERATURE SCANNERS	TRANSMITTERS
MULTIMETERS	ph/ORP CONTROLLERS
ph RECORDERS	

INTENTIONALLY LEFT BLANK

STI MANUFACTURING, INC.

CONTENTS - THERMOCOUPLES

STI MANUFACTURING, INC.

CONTENTS - RTDs

STI MANUFACTURING, INC.

CONTENTS - THERMOWELLS

STI MANUFACTURING, INC.

CONTENTS - TECHNICAL

STI MANUFACTURING, INC.

The Temperature Sensors Displayed in our catalog are STANDARD STYLES used for Industrial Temperature Measurement. Additionally, *STI MANUFACTURING, INC*. will be pleased to quote Temperature Sensors to customer specifications and offer our assistance with the following services:

*** CERTIFICATION OF CALIBRATION ----- TRACEABLE TO N.I.S.T.**

*** CUSTOM FABRICATION SERVICES**

*** EXOTIC OUTER METALLIC SHEATH ---- Hast. C, Hast. B, Carpenter 20**
Monel 400, and many others

*** 24 HOUR EMERGENCY ASSISTANCE**

***STI MANUFACTURING, INC.* will continue to offer the highest Quality Product at competitive prices.**

Our Goal is to "Strive perpetually towards setting Total Quality Standards to which all others are measured".

STI MANUFACTURING, INC.

STYLE 1A

Back to Table of Contents

SHEATH TYPE THERMOCOUPLE WITH WIRES EXPOSED

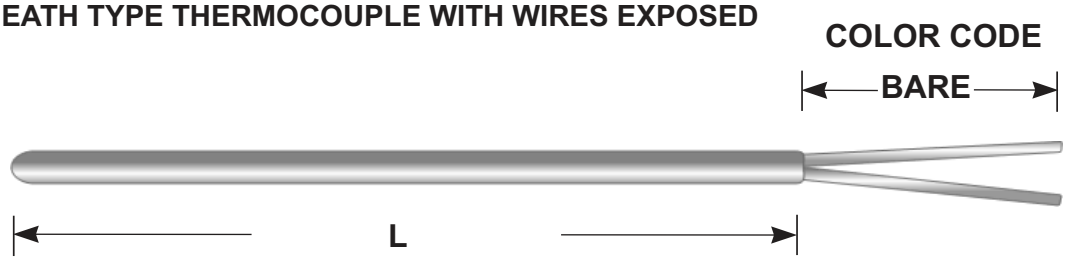

1 2 3 4 5 6 7 8 9 10 11

1 A [ ] – [ ] – [ ] [ ] [ ] [ ] [ ] – [ ] – [ ]

CALIBRATION
E J K T

"L" DIM. IN INCHES (IN.)

SHEATH MATERIAL
A = 304SS C = 316SS
B = INC. 600 D = 310SS
X = SPECIFY OTHER MATERIAL

SHEATH O.D. (IN.)
5 = .188
6 = .250
7 = .313
8 = .375
9 = .500
0 = OTHER

SPRING LOADED
N = NO
Y = YES

ADDITIONAL REQUIREMENTS
0 = IF NONE
1 = SPECIFY

NO. OF ELEMENTS
1 = SINGLE
2 = DUAL
3 = TRIPLEX

BARE LEADS (IN.)
1 = 1"
2 = 2"
3 = 3"

JUNCTIONS
GROUNDED G
UNGROUNDED U
EXPOSED E

SPRING LOADING

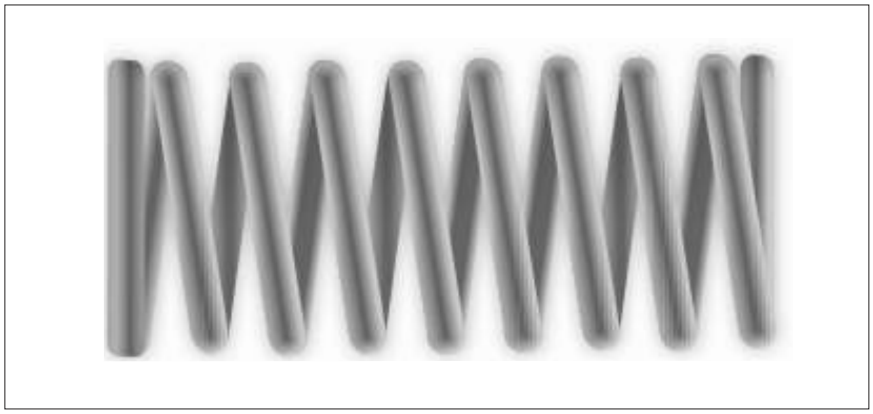

STI MANUFACTURING, INC.

Back to Table of Contents

STYLE 1B

SHEATH TYPE THERMOCOUPLE WITH WIRES EXPOSED

COLOR CODE

BARE

L

1	2	3	–	4	–	5	6	7	8	9	10	11	12	13	–	14	–	15
1	B																	

CALIBRATION
E J K T

"L" DIM. IN INCHES (IN.)

SHEATH MATERIAL
A = 304SS C = 316SS
B = INC. 600 D = 310SS
X = SPECIFY OTHER MATERIAL

SHEATH O.D. (IN.)
5 = .188
6 = .250
7 = .313
8 = .375
9 = .500
0 = OTHER

SPRING LOADED
N = NO
Y = YES

WELD PADS
0 = IF NONE
P = 1" X 1"
X = SPECIFY

ADDITIONAL REQUIREMENTS
0 = IF NONE
1 = SPECIFY

NO. OF ELEMENTS
1 = SINGLE
2 = DUAL
3 = TRIPLEX

BARE LEADS (IN.)
1 = 1"
2 = 2"
3 = 3"

JUNCTIONS
GROUNDED G
UNGROUNDED U
EXPOSED E

S/S TUBE FITTINGS
CHOSE FROM TABLE
0 = NONE

HEADS
0 = NONE
A = EXPLOSION PROOF
B = CAST ALUMINUM
C = CAST IRON
D = POLYPROPYLENE
E = HINGED CAST ALUM.
F = HINGED POLY

NIPPLE, UNIONS AND HEX NIPPLES
0 = NONE
1 = N.U.N. = 6"
2 = N.U. = 4"
3 = NIP. = 3"
4 = HEX NIP= 2 1/2"
5 = HEX NIP OIL SEAL= 2"

STI MANUFACTURING, INC.

Back to Table of Contents

STYLE 1B OPTIONS

INDUSTRIAL THERMOCOUPLE HEADS

3/4" NPT CONDUIT
1/2" NPT INSTRUMENT

AVAILABLE
MATERIALS
CAST IRON
CAST ALUMINUM
POLYPROPYLENE
*STAINLESS STEEL
*SPECIAL ORDER

TERMINAL BLOCKS
ARE CERAMIC PORCELAIN
WITH BRASS TERMINALS

GROUND SCREWS
ARE AVAILALBE-
SPECIFY UNDER
ADDITIONL
REQUIREMENTS

EXPLOSION PROOF HEADS

3/4" NPT X 3/4" NPT PORTS
*1/2" OPTIONAL

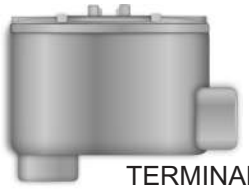

TERMINAL STRIPS
ARE PHENOLIC

AVAILABLE MATERIALS
CAST ALUMINM

INDUSTRIAL THERMOCOUPLE HEADS
HINGED TYPE -WEATHER TIGHT SEAL
NEMA 4 RATING

3/4" NPT CONDUIT
1/2" NPT INSTRUMENT

AVAILABLE
MATERIALS
CAST ALUMINUM
POLYPROPYLENE

TERMINAL BLOCKS
ARE CERAMIC PORCELAIN
WITH BRASS TERMINALS

EXPLOSION PROOF HEADS
FMCSA CERTIFICATION
NEMA 4 RATING

3/4" NPT CONDUIT
1/2" NPT INSTRUMENT

AVAILABLE
MATERIALS
CAST ALUMINUM
*STAINLESS STEEL
*EPOXY COATED
*SPECIAL ORDER

TERMINAL BLOCKS
ARE BAKELITE

WELD PADS

1" X 1" STANDARD
SIZING AND BENDING OPTIONAL

SPRING LOADING

STANDARD 1/2" NPT SCH. 40
GALVANIZED

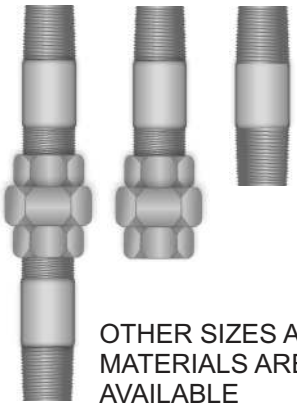

OTHER SIZES AND
MATERIALS ARE
AVAILABLE

STANDARD HEX NIPPLE

1/2" NPT 316SS

OTHER MATERIALS
AND SIZES AVAILABLE

TUBE TO PIPE FITTINGS
STAINLESS STEEL STANDARD
OTHER MATERIALS AVAILABLE

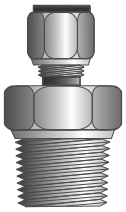

TC O.D.	X NPT
1/8"	1/8" = 2
3/16"	1/4" = 3
1/4"	1/4" = 4
1/4"	1/2" = 6
3/8"	1/2" = 7
1/2"	1/2" = 8

IF VENTED = X

STI MANUFACTURING, INC.

STYLE 1C

SHEATH TYPE THERMOCOUPLE WITH QUICK-DISCONNECT CONNECTOR MOUNTED DIRECT TO SHEATH

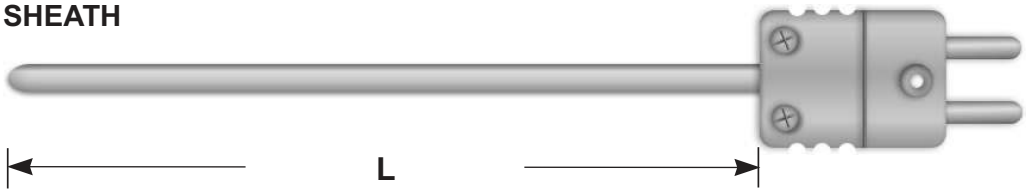

1	2	3	–	4	–	5	6	7	8	9	10	11	12	–	13
1	C														

CALIBRATION
E J K T

"L" DIM. IN INCHES (IN.)

SHEATH MATERIAL
A = 304SS C = 316SS
B = INC. 600 D = 310SS
X = SPECIFY OTHER MATERIAL

SHEATH O.D. (IN.)
1 = .020 6 = .250
2 = .040 7 = .313
3 = .062 8 = .375
4 = .125 9 = .500
5 = .188 0 = OTHER

SPRING LOADED
N = NO
Y = YES

ADDITIONAL REQUIREMENTS
0 = IF NONE
1 = SPECIFY

NO. OF ELEMENTS
1 = SINGLE
2 = DUAL

JUNCTIONS
GROUNDED G
UNGROUNDED U
EXPOSED E

S/S TUBE FITTINGS
CHOSE FROM TABLE
0 = NONE

WELD PADS
0 = IF NONE
P = 1" X 1"
X = SPECIFY

CONNECTOR TYPES
0 = NONE
A = STANDARD JACK (FEMALE)
B = STANDARD PLUG (MALE)
C = STANDARD PLUG W/JACK (MALE & FEMALE)
* F = MINIATURE PLUG
* G = MINIATURE JACK
* H = MINIATURE PLUG W/ JACK (MALE & FEMALE)
L = HIGH TEMP PLUG
M = HIGH TEMP JACK
N = HIGH TEMP PLUG W/ JACK (MALE & FEMALE)

*** NOT AVAILABLE ON DUAL T/Cs**

STI MANUFACTURING, INC.

Back to Table of Contents

STYLE 1C OPTIONS

QUICK DISCONNECT
CONNECTORS

400 DEG. F CONNECTORS STANDARD
800 DEG. F CONNECTORS AVAILABLE

SPRING LOADING

WELD PADS

1" X 1" STANDARD
SIZING AND BENDING OPTIONAL

REDUCED TIPS

TUBE TO PIPE FITTINGS
STAINLESS STEEL STANDARD
OTHER MATERIALS AVAILABLE

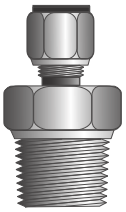

TC O.D.	X NPT
1/8"	1/8" = 2
3/16"	1/4" = 3
1/4"	1/4" = 4
1/4"	1/2" = 6
3/8"	1/2" = 7
1/2"	1/2" = 8

IF VENTED = X

STI MANUFACTURING, INC.

STYLE 2A

SHEATH TYPE THERMOCOUPLE WITH FLEXIBLE INSULATED LEAD WIRE, 20 ga. STANDARD, OTHER GAUGES AVAILABLE

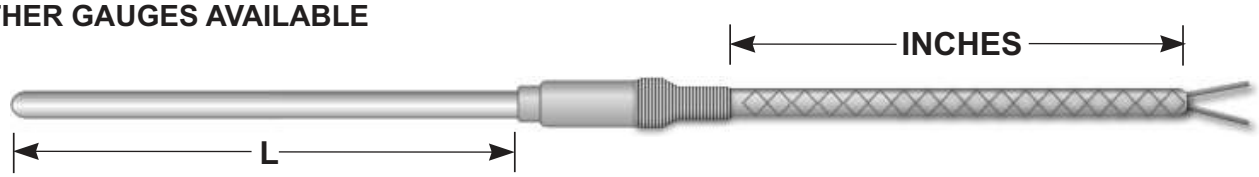

1	2	3	4	5	6	7	8	9	10	11	12	13	14	15	16
2	A														

CALIBRATION
E J K T

"L" DIM. IN INCHES (IN.)

SHEATH MATERIAL
A = 304SS C = 316SS
B = INC. 600 D = 310SS
X = SPECIFY OTHER MATERIAL

SHEATH O.D. (IN.)
1 = .020 6 = .250
2 = .040 7 = .313
3 = .062 8 = .375
4 = .125 9 = .500
5 = .188 0 = OTHER

SMOOTH TRANSITION
0 = IF NO
1 = IF YES

SPRING LOADED
N = NO
Y = YES

ADDITIONAL REQUIREMENTS
0 = IF NONE
1 = SPECIFY

NO. OF ELEMENTS
1 = SINGLE
2 = DUAL
3 = TRIPLEX

LEAD WIRE TYPE
1 = FIBERGLASS
2 = PVC
3 = TEFLON
4 = KAPTON
5 = F/G W/ SS OVERBRAID
X = DRAIN WIRE

LEAD WIRE LENGTH
(IN INCHES)

JUNCTIONS
GROUNDED G
UNGROUNDED U
EXPOSED E

S/S TUBE FITTINGS
CHOSE FROM TABLE
0 = NONE

SPADE LUGS
N = NONE
Y = YES

CONNECTOR TYPES
0 = NONE
A = STANDARD JACK (FEMALE)
B = STANDARD PLUG (MALE)
C = STANDARD PLUG W/JACK (MALE & FEMALE)
F = MINIATURE PLUG
G = MINIATURE JACK
H = MINIATURE PLUG W/ JACK (MALE & FEMALE)
L = HIGH TEMP PLUG
M = HIGH TEMP JACK
N = HIGH TEMP PLUG W/ JACK (MALE & FEMALE)

STI MANUFACTURING, INC.

Back to Table of Contents

STYLE 2A OPTIONS

LEAD WIRE WITH STAINLESS
STEEL OVER BRAID.
FIBER/GLASS IS STANDARD
OTHER INSULATIONS AVAILABLE

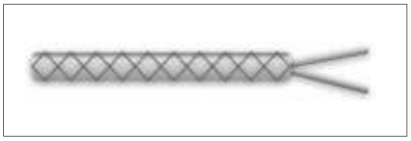

SPRING LOADING

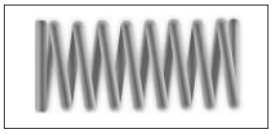

QUICK DISCONNECT
CONNECTORS

400 DEG. F CONNECTORS STANDARD
800 DEG. F CONNECTORS AVAILABLE

WELD PADS

1" X 1" STANDARD
SIZING AND BENDING OPTIONAL

SMOOTH TRANSITIONS

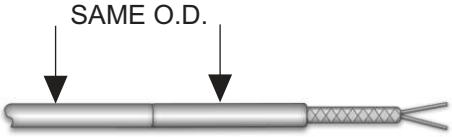

NOTE:
NOT SPRING RELIEF

REDUCED TIPS

TUBE TO PIPE FITTINGS
STAINLESS STEEL STANDARD
OTHER MATERIALS AVAILABLE

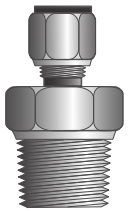

TC O.D.	X NPT
1/8"	1/8" = 2
3/16"	1/4" = 3
1/4"	1/4" = 4
1/4"	1/2" = 6
3/8"	1/2" = 7
1/2"	1/2" = 8

IF VENTED = X

STI MANUFACTURING, INC.

STYLE 2BFIXED

SHEATH TYPE THERMOCOUPLE WITH SS HEX NIPPLE FIXED DIRECT TO SHEATH WITH FLEXIBLE INSULATED LEAD WIRE, 20 ga. STANDARD, OTHER GAUGES AVAILABLE.

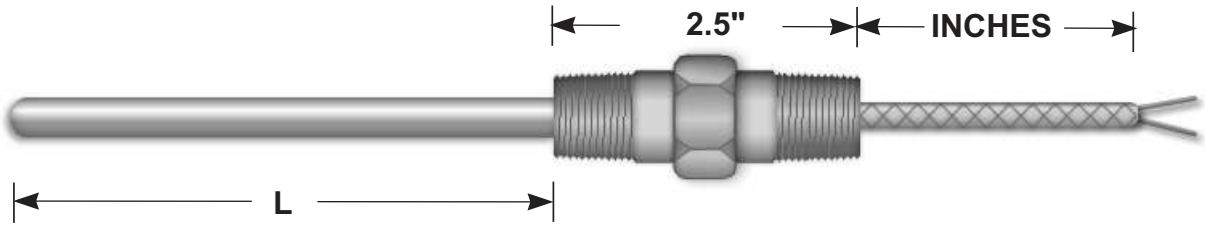

1 2 3 4 – 5 – 6 7 8 – 9 10 11 – 12 – 13 – 14

2 B F

CALIBRATION
E J K T

"L" DIM. IN INCHES (IN.)

SHEATH MATERIAL
A = 304SS C = 316SS
B = INC. 600 D = 310SS
X = SPECIFY OTHER MATERIAL

SHEATH O.D. (IN.)
5 = .188
6 = .250
7 = .313
8 = .375
9 = .500
0 = OTHER

316SS HEX NIPPLES
4 = 1/2 X 1/2" NPT
8 = 1/2 X 3/4" NPT
10 = 1/2 X 1" NPT
X = 1/2 X 1/2" NPT
OIL SEAL
OTHERS AVAILABLE

ADDITIONAL REQUIREMENTS
0 = IF NONE
1 = SPECIFY

NO. OF ELEMENTS
1 = SINGLE
2 = DUAL
3 = TRIPLEX

LEAD WIRE TYPE
1 = FIBERGLASS
2 = PVC
3 = TEFLON
4 = KAPTON
5 = F/G W/ SS OVERBRAID
X = DRAIN WIRE

LEAD WIRE LENGTH
(IN INCHES)

JUNCTIONS
GROUNDED G
UNGROUNDED U
EXPOSED E

SPADE LUGS
N = NONE
Y = YES

STI MANUFACTURING, INC.

Back to Table of Contents

STYLE 2BF OPTIONS

REDUCED TIPS

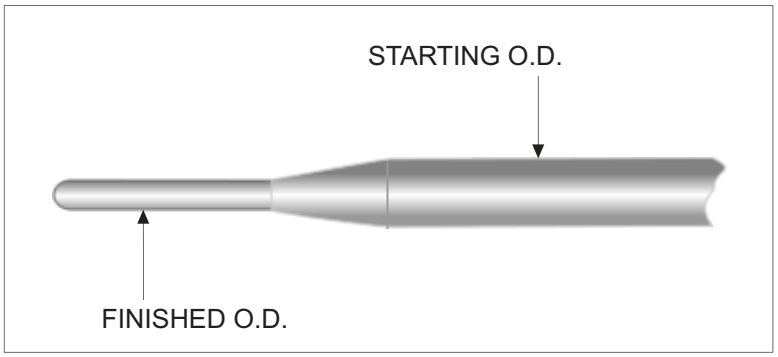

STANDARD HEX NIPPLE

1/2" NPT 316SS

OTHER MATERIALS
AND SIZES AVAILABLE

STI MANUFACTURING, INC.

Back to Table of Contents

STYLE 2BSPRING LOADED

SHEATH TYPE THERMOCOUPLE WITH SS HEX NIPPLE AJUSTABLE TO DESIRED "U" DIMENSION WITH FLEXIBLE INSULATED LEAD WIRE, 20 ga. STANDARD, OTHER GAUGES AVAILABLE.

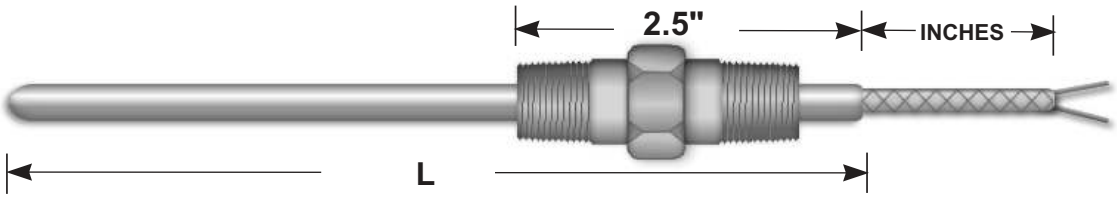

1 2 3 4 – 5 – 6 7 8 9 10 11 12 – 13 – 14 – 15

2 B S

CALIBRATION
E J K T

"L" DIM. IN INCHES (IN.)

SHEATH MATERIAL
A = 304SS C = 316SS
B = INC. 600 D = 310SS
X = SPECIFY OTHER MATERIAL

SHEATH O.D. (IN.)
5 = .188
6 = .250
7 = .313
8 = .375
9 = .500
0 = OTHER

SPRING LOADED
N = NO
Y = YES

316SS HEX NIPPLES
4 = 1/2 X 1/2" NPT
8 = 1/2 X 3/4" NPT
10 = 1/2 X 1" NPT
X = 1/2 X 1/2" NPT
OIL SEAL
OTHERS AVAILABLE

ADDITIONAL REQUIREMENTS
0 = IF NONE
1 = SPECIFY

NO. OF ELEMENTS
1 = SINGLE
2 = DUAL
3 = TRIPLEX

LEAD WIRE TYPE
1 = FIBERGLASS
2 = PVC
3 = TEFLON
4 = KAPTON
5 = F/G W/ SS OVERBRAID
X = DRAIN WIRE

LEAD WIRE LENGTH
(IN INCHES)

JUNCTIONS
GROUNDED G
UNGROUNDED U
EXPOSED E

SPADE LUGS
N = NONE
Y = YES

STI MANUFACTURING, INC.

Back to Table of Contents

STYLE 2BS OPTIONS

SPRING LOADING

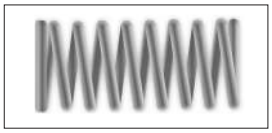

REDUCED TIPS

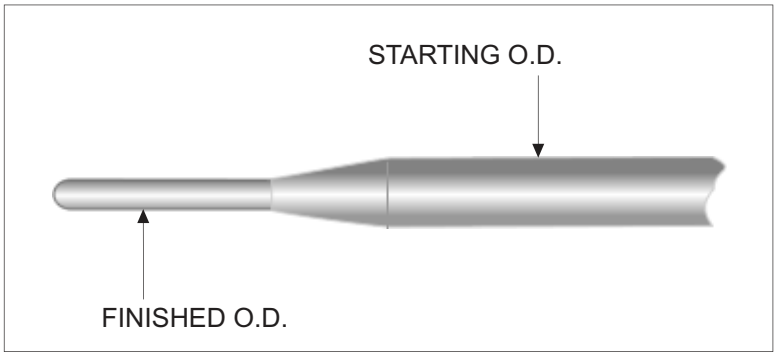

STANDARD HEX NIPPLE

1/2" NPT 316SS

OTHER MATERIALS
AND SIZES AVAILABLE

STI MANUFACTURING, INC.

Back to Table of Contents

STYLE 3A

SHEATH TYPE THERMOCOUPLE WITH FLEXIBLE SS ARMOR AND INSULATED LEAD WIRE
20 ga. STANDARD, OTHER GAUGES AVAILABLE

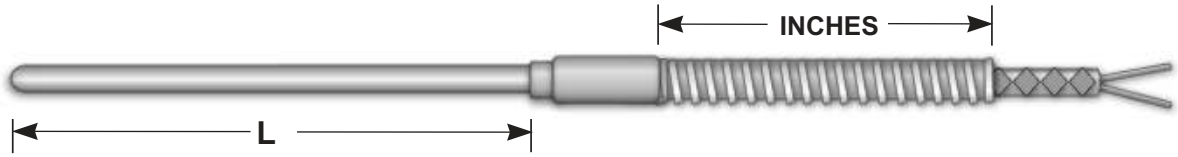

1	2	3	4	5	6	7	8	9	10	11	12	13	14
3	A												

CALIBRATION
E J K T

"L" DIM. IN INCHES (IN.)

SHEATH MATERIAL
A = 304SS C = 316SS
B = INC. 600 D = 310SS
X = SPECIFY OTHER MATERIAL

SHEATH O.D. (IN.)
1 = .020 6 = .250
2 = .040 7 = .313
3 = .062 8 = .375
4 = .125 9 = .500
5 = .188 0 = OTHER

ADDITIONAL REQUIREMENTS
0 = IF NONE
1 = SPECIFY

NO. OF ELEMENTS
1 = SINGLE
2 = DUAL
3 = TRIPLEX

LEAD WIRE TYPE
1 = FIBERGLASS
2 = PVC
3 = TEFLON
4 = KAPTON
5 = F/G W/ SS OVERBRAID
X = DRAIN WIRE

LEAD WIRE LENGTH
(IN INCHES)

JUNCTIONS
GROUNDED G
UNGROUNDED U
EXPOSED E

S/S TUBE FITTINGS
CHOSE FROM TABLE
0 = NONE

PVC OVER ARMOR
0 = IF NO
P = IF YES

CONNECTOR TYPES
0 = NONE
A = STANDARD JACK (FEMALE)
B = STANDARD PLUG (MALE)
C = STANDARD PLUG W/JACK (MALE & FEMALE)
F = MINIATURE PLUG
G = MINIATURE JACK
H = MINIATURE PLUG W/ JACK (MALE & FEMALE)
L = HIGH TEMP PLUG
M = HIGH TEMP JACK
N = HIGH TEMP PLUG W/ JACK (MALE & FEMALE)

STI MANUFACTURING, INC.

Back to Table of Contents

STYLE 3A OPTIONS

QUICK DISCONNECT
CONNECTORS

400 DEG. F CONNECTORS STANDARD
800 DEG. F CONNECTORS AVAILABLE

SPRING LOADING

WELD PADS

1" X 1" STANDARD
SIZING AND BENDING OPTIONAL

CORD GRIPS

1/2" NPT
3/4" NPT
OTHER SIZES ARE
AVAILABLE

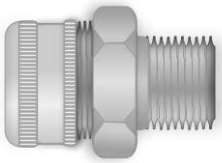

REDUCED TIPS

TUBE TO PIPE FITTINGS
STAINLESS STEEL STANDARD
OTHER MATERIALS AVAILABLE

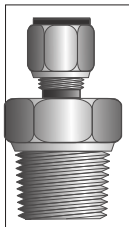

TC O.D.	X NPT
1/8"	1/8" = 2
3/16"	1/4" = 3
1/4"	1/4" = 4
1/4"	1/2" = 6
3/8"	1/2" = 7
1/2"	1/2" = 8

IF VENTED = X

STI MANUFACTURING, INC.

STYLE 4A

SHEATH TYPE THERMOCOUPLE WITH REMOTE MOUNT HEAD, FLEXIBLE SS ARMOR, AND INSULATED LEAD WIRE 20 ga. STANDARD, OTHER GAUGES AVAILABLE

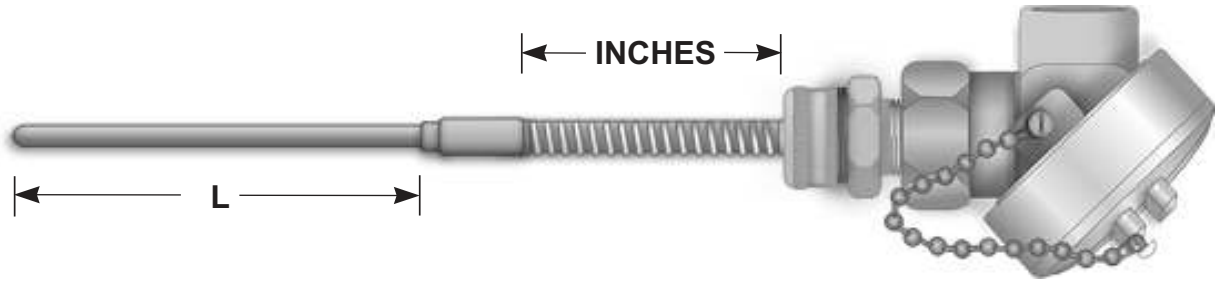

1	2	3	–	4	–	5	6	7	8	9	10	11	12	–	13	–	14	–	15
4	A																		

CALIBRATION
E J K T

"L" DIM. IN INCHES (IN.)

SHEATH MATERIAL
A = 304SS C = 316SS
B = INC. 600 D = 310SS
X = SPECIFY OTHER MATERIAL

SHEATH O.D. (IN.)
1 = .020 6 = .250
2 = .040 7 = .313
3 = .062 8 = .375
4 = .125 9 = .500
5 = .188 0 = OTHER

HEADS
0 = NONE
A = EXPLOSION PROOF
B = CAST ALUMINUM
C = CAST IRON
D = POLYPROPYLENE
E = HINGED CAST ALUM.
F = HINGED POLY

S/S TUBE FITTINGS
CHOSE FROM TABLE
0 = NONE

ADDITIONAL REQUIREMENTS
0 = IF NONE
1 = SPECIFY

NO. OF ELEMENTS
1 = SINGLE
2 = DUAL
3 = TRIPLEX

LEAD WIRE TYPE
1 = FIBERGLASS
2 = PVC
3 = TEFLON
4 = KAPTON
5 = F/G W/ SS OVERBRAID
X = DRAIN WIRE

LEAD WIRE LENGTH
(IN INCHES)

JUNCTIONS
GROUNDED G
UNGROUNDED U
EXPOSED E

PVC OVER ARMOR
0 = IF NO
P = IF YES

SPRING LOADED
N = NO
Y = YES

STI MANUFACTURING, INC.

Back to Table of Contents

STYLE 4A OPTIONS

INDUSTRIAL THERMOCOUPLE HEADS

3/4" NPT CONDUIT
1/2" NPT INSTRUMENT

AVAILABLE
MATERIALS
CAST IRON
CAST ALUMINUM
POLYPROPYLENE
*STAINLESS STEEL
*SPECIAL ORDER

TERMINAL BLOCKS
ARE CERAMIC PORCELAIN
WITH BRASS TERMINALS

GROUND SCREWS ARE AVAILALBE- SPECIFY UNDER ADDITIONL REQUIREMENTS

EXPLOSION PROOF HEADS

3/4" NPT X 3/4" NPT PORTS
*1/2" OPTIONAL

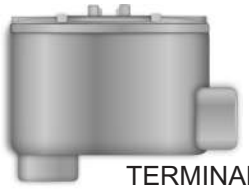

TERMINAL STRIPS
ARE PHENOLIC

AVAILABLE MATERIALS
CAST ALUMINM

INDUSTRIAL THERMOCOUPLE HEADS
HINGED TYPE -WEATHER TIGHT SEAL
NEMA 4 RATING

3/4" NPT CONDUIT
1/2" NPT INSTRUMENT

AVAILABLE
MATERIALS
CAST ALUMINUM
POLYPROPYLENE

TERMINAL BLOCKS
ARE CERAMIC PORCELAIN
WITH BRASS TERMINALS

EXPLOSION PROOF HEADS
FMCSA CERTIFICATION
NEMA 4 RATING

3/4" NPT CONDUIT
1/2" NPT INSTRUMENT

AVAILABLE
MATERIALS
CAST ALUMINUM
*STAINLESS STEEL
*EPOXY COATED
*SPECIAL ORDER

TERMINAL BLOCKS
ARE BAKELITE

SPRING LOADING

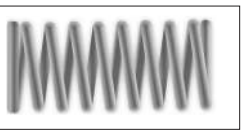

STANDARD HEX NIPPLE

1/2" NPT 316SS

OTHER MATERIALS
AND SIZES AVAILABLE

WELD PADS

1" X 1" STANDARD
SIZING AND BENDING OPTIONAL

REDUCED TIPS

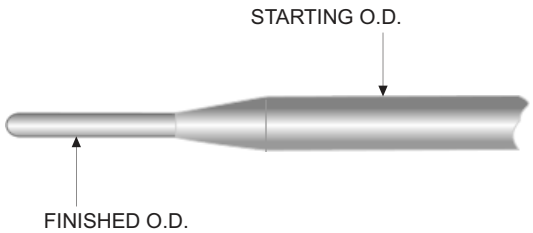

TUBE TO PIPE FITTINGS
STAINLESS STEEL STANDARD
OTHER MATERIALS AVAILABLE

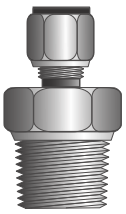

TC O.D.	X NPT
1/8"	1/8" = 2
3/16"	1/4" = 3
1/4"	1/4" = 4
1/4"	1/2" = 6
3/8"	1/2" = 7
1/2"	1/2" = 8

IF VENTED = X

STYLE 5A

TUBE TYPE THERMOCOUPLE (FOR FIELD CUTTING) WITH FLEXIBLE INSULATED LEAD WIRE
20 ga. STANDARD, OTHER GAUGES AVAILABLE

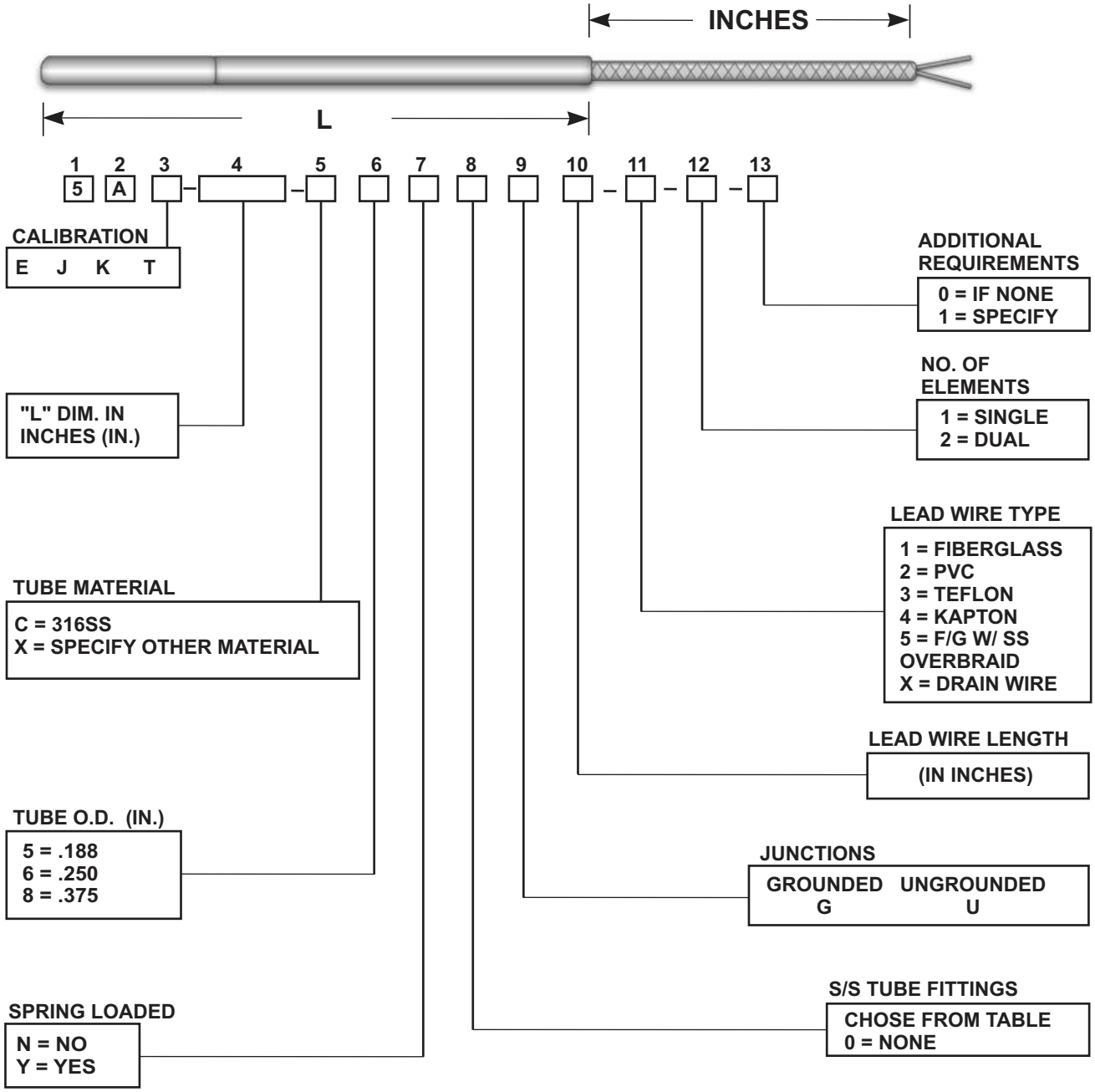

STI MANUFACTURING, INC.

Back to Table of Contents

STYLE 5A OPTIONS

INDUSTRIAL THERMOCOUPLE HEADS

3/4" NPT CONDUIT
1/2" NPT INSTRUMENT

AVAILABLE
MATERIALS
CAST IRON
CAST ALUMINUM
POLYPROPYLENE
*STAINLESS STEEL
*SPECIAL ORDER

TERMINAL BLOCKS
ARE CERAMIC PORCELAIN
WITH BRASS TERMINALS

GROUND SCREWS
ARE AVAILALBE-
SPECIFY UNDER
ADDITIONL
REQUIREMENTS

EXPLOSION PROOF HEADS

3/4" NPT X 3/4" NPT PORTS
*1/2" OPTIONAL

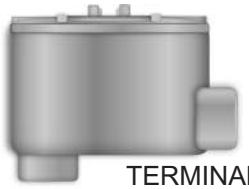

TERMINAL STRIPS
ARE PHENOLIC

AVAILABLE MATERIALS
CAST ALUMINM

INDUSTRIAL THERMOCOUPLE HEADS
HINGED TYPE -WEATHER TIGHT SEAL
NEMA 4 RATING

3/4" NPT CONDUIT
1/2" NPT INSTRUMENT

AVAILABLE
MATERIALS
CAST ALUMINUM
POLYPROPYLENE

TERMINAL BLOCKS
ARE CERAMIC PORCELAIN
WITH BRASS TERMINALS

EXPLOSION PROOF HEADS
FMCSA CERTIFICATION
NEMA 4 RATING

3/4" NPT CONDUIT
1/2" NPT INSTRUMENT

AVAILABLE
MATERIALS
CAST ALUMINUM
*STAINLESS STEEL
*EPOXY COATED
*SPECIAL ORDER

TERMINAL BLOCKS
ARE BAKELITE

WELD PADS

1" X 1" STANDARD
SIZING AND BENDING OPTIONAL

SPRING LOADING

STANDARD 1/2" NPT SCH. 40
GALVANIZED

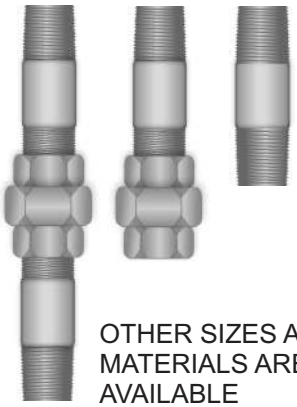

OTHER SIZES AND
MATERIALS ARE
AVAILABLE

STANDARD HEX NIPPLE

1/2" NPT 316SS

OTHER MATERIALS
AND SIZES AVAILABLE

TUBE TO PIPE FITTINGS
STAINLESS STEEL STANDARD
OTHER MATERIALS AVAILABLE

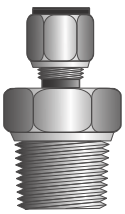

TC O.D.	X NPT
1/8"	1/8" = 2
3/16"	1/4" = 3
1/4"	1/4" = 4
1/4"	1/2" = 6
3/8"	1/2" = 7
1/2"	1/2" = 8

IF VENTED = X

STI MANUFACTURING, INC.

STYLE 1BA

SHEATH TYPE BAYONET THERMOCOUPLE WITH SS ARMOR AND FLEXIBLE LEAD WIRE, 20 ga. STANDARD, OTHER GAUGES AVAILABLE

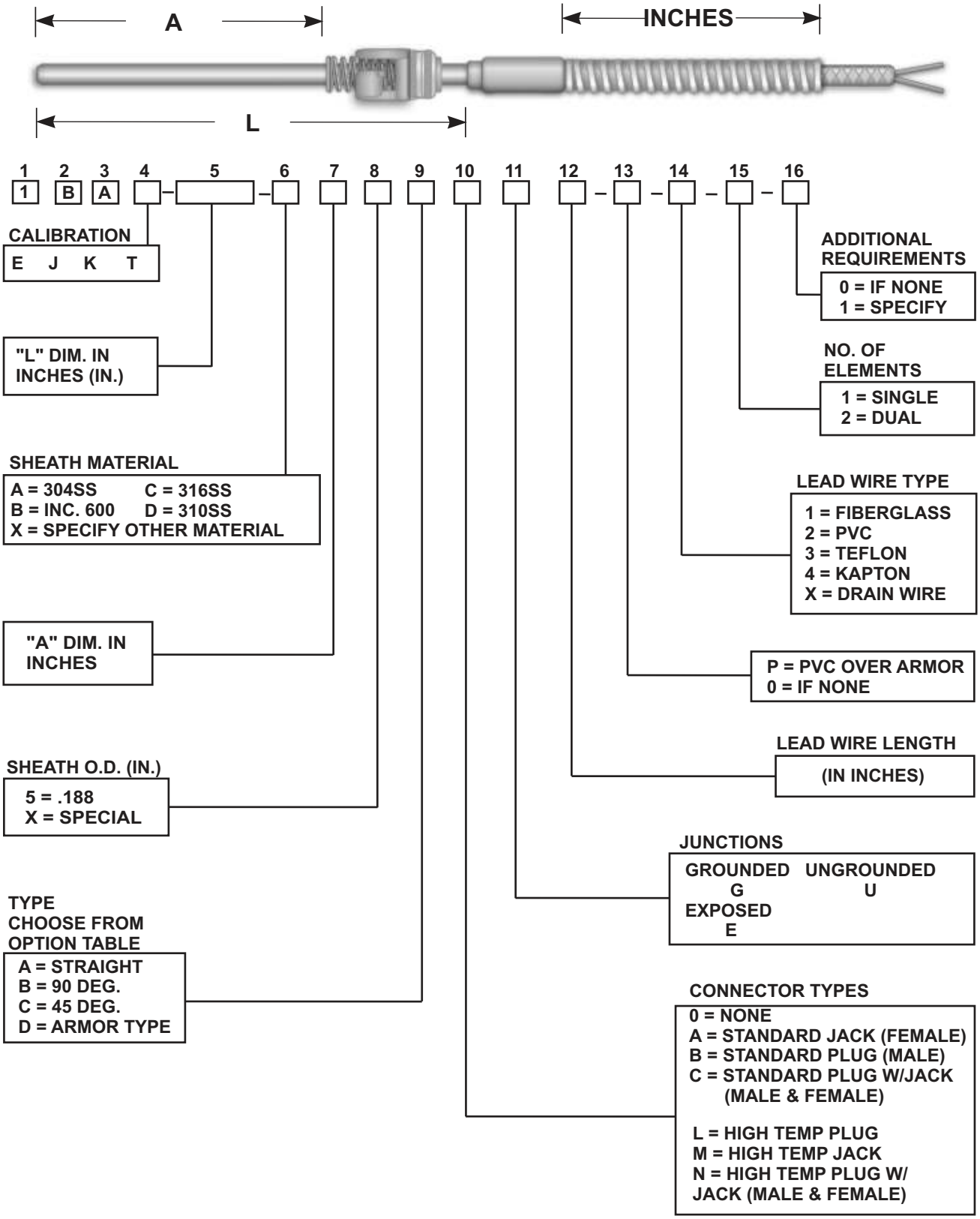

STI MANUFACTURING, INC.

Back to Table of Contents

STYLE 1BA OPTIONS

A = STRAIGHT

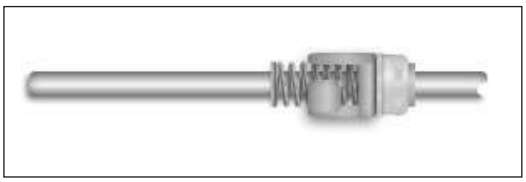

QUICK DISCONNECT CONNECTORS

400 DEG. F CONNECTORS STANDARD
800 DEG. F CONNECTORS AVAILABLE

B = 90 DEG. BEND

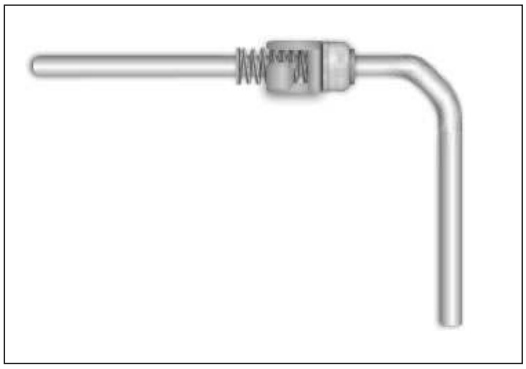

D = ARMOR TYPE

C = 45 DEG. BEND

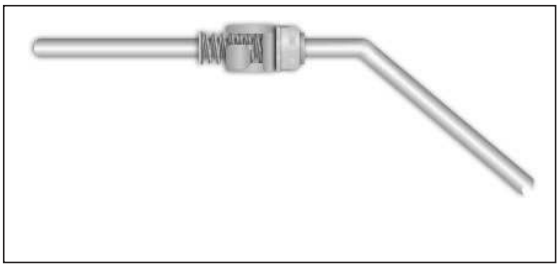

REDUCED TIPS

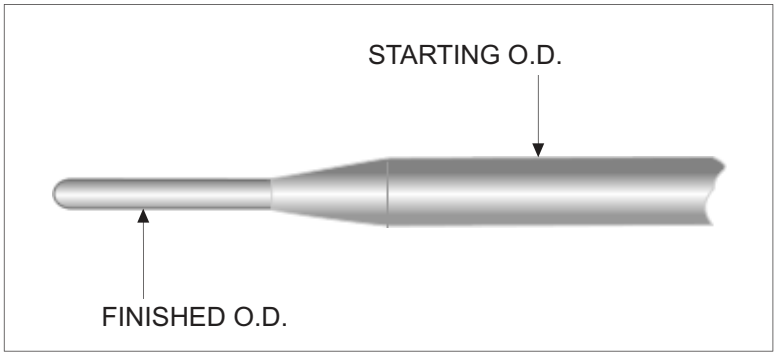

Back to Table of Contents

STI MANUFACTURING, INC.

STYLE 1PM

PLASTIC MELT EXTRUDER BOLT THERMOCOUPLE

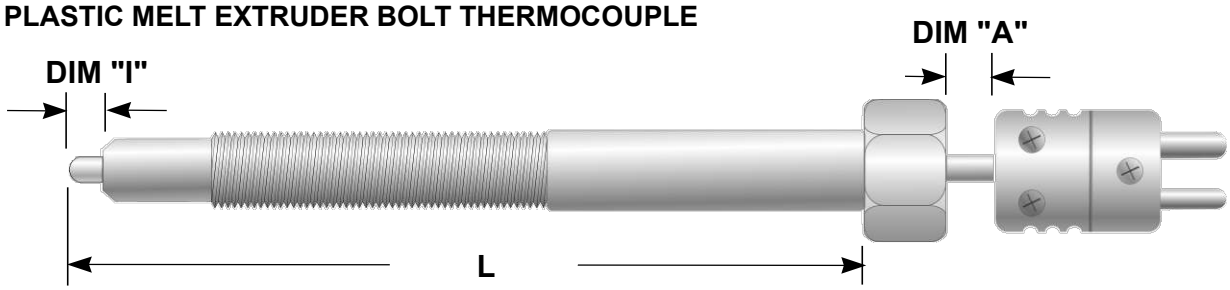

1	2	3	4	–	5	–	6	–	7	8	9	10	–	11	–	12	–	13
1	P	M																

CALIBRATION
E J K T

"L" DIM. IN INCHES (IN.)

SHEATH MATERIAL
A = 304SS C = 316SS
B = INC. 600 D = 310SS
X = SPECIFY OTHER MATERIAL

SHEATH O.D. (IN.)
1 = .020 6 = .250
2 = .040 7 = .313
3 = .062 8 = .375
4 = .125 9 = .500
5 = .188 0 = OTHER

SHEATH LENGTH "I". (IN.)
0 = FLUSH 5 = 5/8"
1 = 1/8" 6 = 3/4"
2 = 1/4" 7 = 7/8"
3 = 3/8" 8 = 1"
4 = 1/2"

CONNECTOR TYPES
0 = NONE
A = STANDARD JACK (FEMALE)
B = STANDARD PLUG (MALE)
C = STANDARD PLUG W/JACK (MALE & FEMALE)
L = HIGH TEMP PLUG
M = HIGH TEMP JACK
N = HIGH TEMP PLUG W/ JACK (MALE & FEMALE)

ADDITIONAL REQUIREMENTS
0 = IF NONE
1 = SPECIFY

NO. OF ELEMENTS
1 = SINGLE
2 = DUAL

JUNCTIONS
GROUNDED G UNGROUNDED U

"A" DIM. IN INCHES (IN.)

OPTION
A = OPTION A
B = OPTION B
C = OPTION C

STI MANUFACTURING, INC.

Back to Table of Contents

STYLE 1PM OPTIONS

OPTION A

QUICK DISCONNECT
CONNECTORS

400 DEG. F CONNECTORS STANDARD
800 DEG. F CONNECTORS AVAILABLE

OPTION B

SS ARMOR WITH THERMOCOUPLE
LEAD WIRE

OPTION C

STAINLESS STEEL ARMOR WITH
QUICK DISCONNECT CONNECTORS

INTENTIONALLY LEFT BLANK

STI MANUFACTURING, INC.

MULTI-POINT REACTOR ASSEMBLIES

STI Manufacturing, Inc. offers many Styles of Reactor Multi-point Assemblies. Each Style is Specialy Fabricated to meet indivdual customer requirements.

STI Manufacturing, Inc. offers our assistance in designing Multi-point Assemblies for Tube Sheet type Reactors. This Style is unique in its ability to be installed into the tubes of the Reactor, while surrounded by catalyst. In effect, this allows tighter control, shows Hot Spots, and gives the informatin needed to maximize the Catalyst longevity.

This Style can be designed to .125" O.D. with 5 (maximum) Thermocouple readings at various lengths inside the .125" tubes.

Bed Type Reactor Multi-point Assemblies can be designed for individual Thermocouple removal while in operation. This allows continuous Temperature monitoring through out the Catalyst life.

If reactor nozzle I.D.s do not allow for individual Thermocouple removal, many other designs are available that offer positive Thermocouple contact to the wall of the Pipe Thermowell and satisfy the client's needs.

STI Manufacturing, Inc. also offers Certified Welding for Pipe Thermowells where required by the customer.

If you have a requirement for Reactor Multi-point Assemblies or if you want additional information, please contact our office.

INTENTIONALLY LEFT BLANK

STI MANUFACTURING, INC.

The RTDs Displayed in our catalog are STANDARD STYLES used for Industrial Temperature Measurement. Additionally, *STI MANUFACTURING, INC*. will be pleased to quote Temperature Sensors to customer specifications and offer our assistance with the following services:

* CERTIFICATION OF CALIBRATION	-----	TRACEABLE TO N.I.S.T.
* MATCHED PAIR RTDs	----	FOR ACCURATE COMPARISON
* STANDARD ACCURACIES	----	0.2 OHM @ 0 DEG. C
* CUSTOM FABRICATION SERVICES		
* EXOTIC OUTER METALLIC SHEATH	----	Hast. C, Hast. B, Carpenter 20 Monel 400, and many others
* THIN FILM	----	FOR FASTER RESPONSE
* VIBRATION RESISTANT		
* 24 HOUR EMERGENCY ASSISTANCE		

***STI MANUFACTURING, INC.* will continue to offer the highest Quality Product at competitive prices.**

Our Goal is to "Strive perpetually towards setting Total Quality Standards to which all others are measured".

STI MANUFACTURING, INC.

Back to Table of Contents

STYLE 1R

SHEATH TUBE TYPE RTD WITH FLEXIBLE INSULATED LEAD WIRE FOR MAXIMUM OPERATING TEMPERATURE OF 400 DEG. F. 22 ga. LEAD WIRE STANDARD, OTHER GAUGES AVAILABLE.

MAX. TEMP. 400 DEG. F

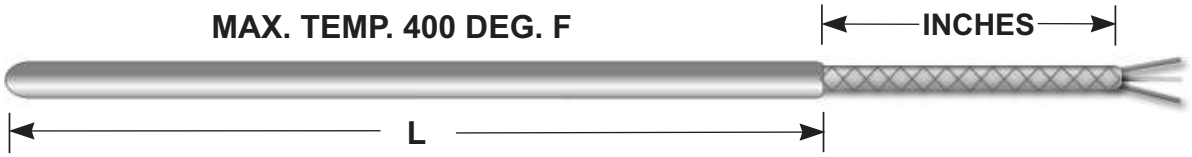

1	2	3	4	5	6	7	8	9	10	11	12	13	14	15
1	R	□	□	□	□	□	□	□	□	□	□	□	□	□

DIN .00385 STANDARD

P = 100 OHM PLAT.
C = 10 OHM COPPER
N = 120 OHM NICKEL
X = SPECIFY

"L" DIM. IN INCHES (IN.)

TUBE MATERIAL

A = 304SS
C = 316SS
X = SPECIFY OTHER MATERIAL

TUBE O.D. (IN.)

4 = .125	7 = .313
5 = .188	8 = .375
6 = .250	9 = .500
	0 = OTHER

LEAD WIRE TYPE

A = FIBERGLASS
B = INDIVIDUAL 22 ga.
C = SHIELDED PVC JACKET
D = SHIELDED TEFLON JACKET
E = TEFLON JACKET STANDARD

NO. OF ELEMENTS

1 = SINGLE
*2 = DUAL

*** NOTE: 3/16" O.D. AND LARGER**

ADDITIONAL REQUIREMENTS

0 = IF NONE
1 = SPECIFY

LEAD WIRE LENGTH

(IN INCHES)

SPRING LOADED

N = NO
Y = YES

NO. OF WIRES

2 = 2 WIRE
3 = 3 WIRE
4 = 4 WIRE

S/S TUBE FITTINGS

CHOSE FROM TABLE
0 = NONE

SPADE LUGS

N = NONE
Y = YES

CONNECTOR TYPES

0 = NONE
* A = STANDARD JACK (FEMALE)
* B = STANDARD PLUG (MALE)
* C = STANDARD PLUG W/JACK (MALE & FEMALE)

*** NOTE: 2 AND 3 PRONG ONLY**

STI MANUFACTURING, INC.

Back to Table of Contents

STYLE 1R OPTIONS

QUICK DISCONNECT
CONNECTORS

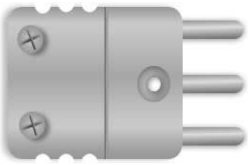

SPRING LOADING

WELD PADS

1" X 1" STANDARD
SIZING AND BENDING OPTIONAL

TUBE TO PIPE FITTINGS
STAINLESS STEEL STANDARD
OTHER MATERIALS AVAILABLE

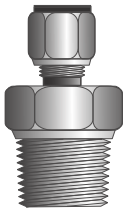

RTD O.D.	X NPT
1/8"	1/8" = 2
3/16"	1/4" = 3
1/4"	1/4" = 4
1/4"	1/2" = 6
3/8"	1/2" = 7
1/2"	1/2" = 8

IF VENTED = X

STI MANUFACTURING, INC.

Back to Table of Contents

STYLE 2R

SHEATH TYPE RTD WITH FLEXIBLE INSULATED LEAD WIRE FOR MAXIMUM OPERATING TEMPERATURE OF 1200 DEG. F. 22 ga. LEAD WIRE STANDARD, OTHER GAUGES AVAILABLE.

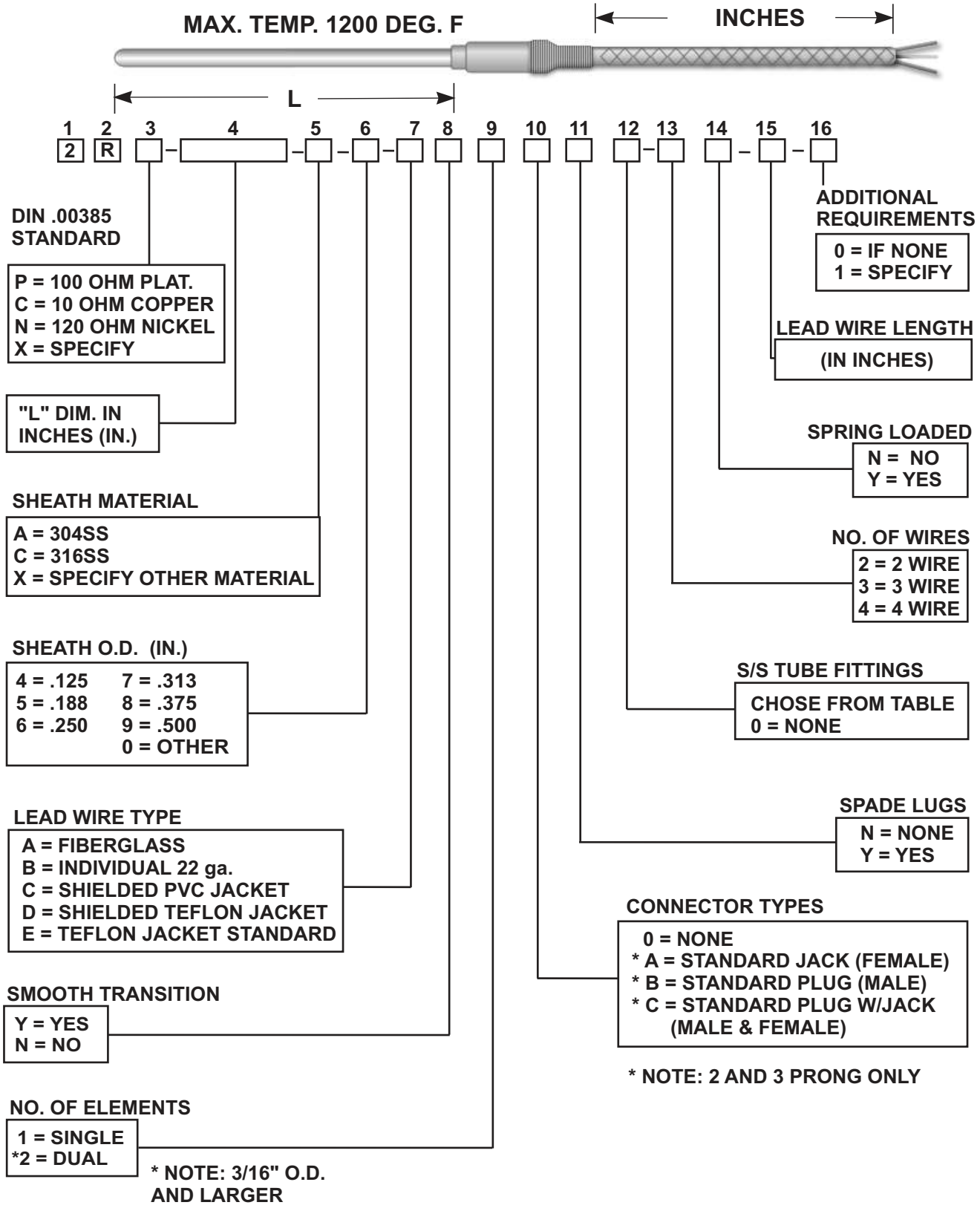

STI MANUFACTURING, INC.

Back to Table of Contents

STYLE 2R OPTIONS

QUICK DISCONNECT
CONNECTORS

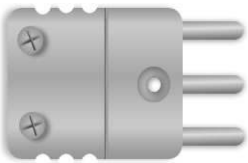

SPRING LOADING

WELD PADS

1" X 1" STANDARD
SIZING AND BENDING OPTIONAL

SMOOTH TRANSITIONS

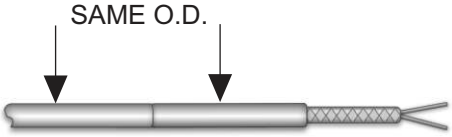

NOTE:
NOT SPRING RELIEF

TUBE TO PIPE FITTINGS
STAINLESS STEEL STANDARD
OTHER MATERIALS AVAILABLE

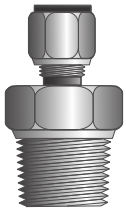

RTD O.D.	X NPT
1/8"	1/8" = 2
3/16"	1/4" = 3
1/4"	1/4" = 4
1/4"	1/2" = 6
3/8"	1/2" = 7
1/2"	1/2" = 8

IF VENTED = X

STI MANUFACTURING, INC.

Back to Table of Contents

STYLE 3R

SHEATH TUBE TYPE RTD WITH ARMOR AND FLEXIBLE INSULATED LEAD WIRE FOR MAXIMUM OPERATING TEMPERATURE OF 400 DEG. F. 22 ga. LEAD WIRE STANDARD, OTHER GAUGES AVAILABLE.

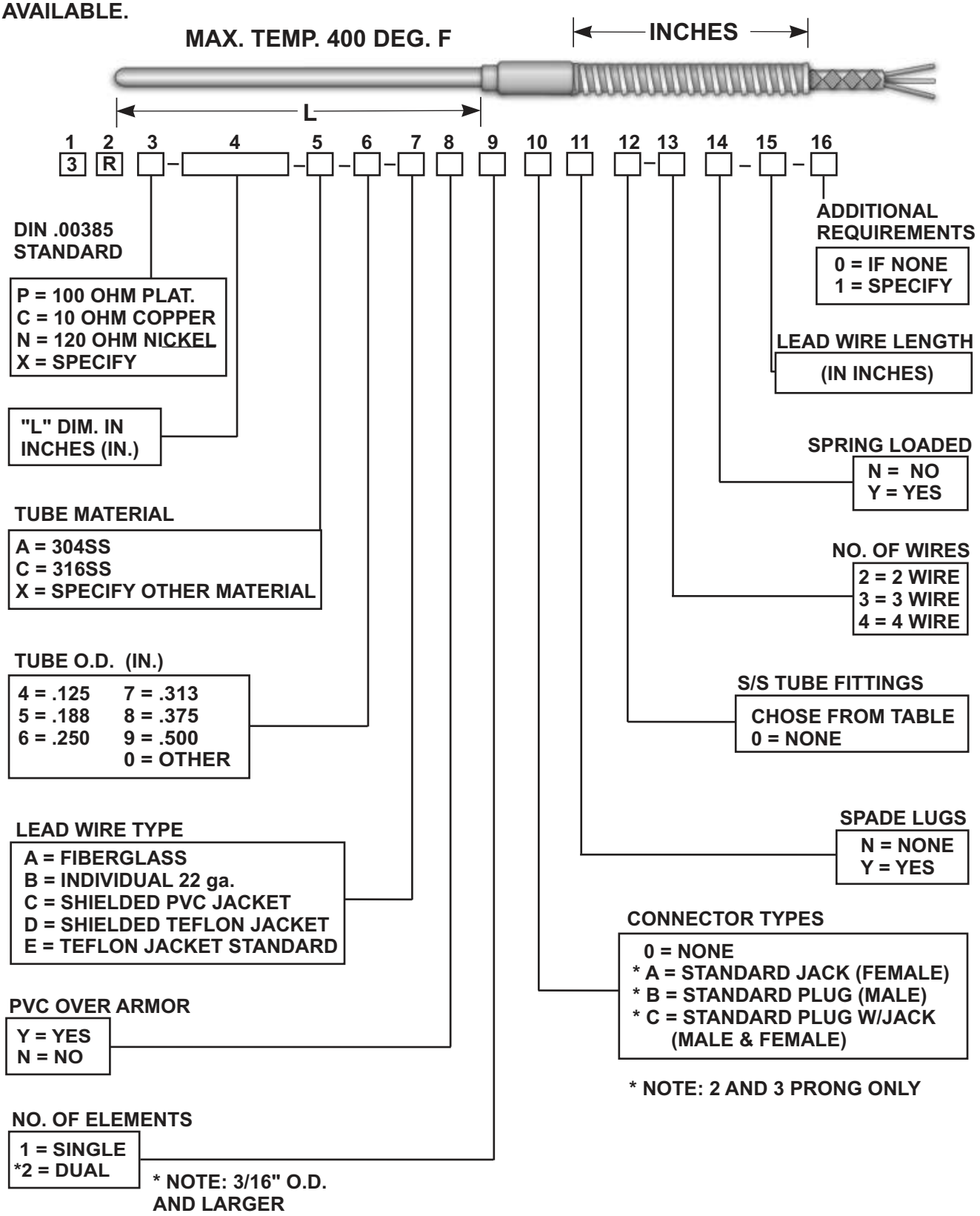

STI MANUFACTURING, INC.

Back to Table of Contents

STYLE 3R OPTIONS

QUICK DISCONNECT
CONNECTORS

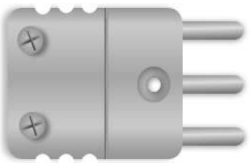

SPRING LOADING

CORD GRIPS

1/2" NPT
3/4" NPT
OTHER SIZES ARE
AVAILABLE

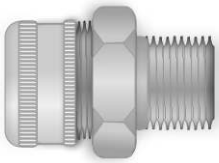

WELD PADS

1" X 1" STANDARD
SIZING AND BENDING OPTIONAL

TUBE TO PIPE FITTINGS
STAINLESS STEEL STANDARD
OTHER MATERIALS AVAILABLE

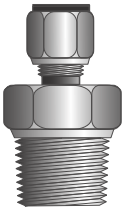

RTD O.D.	X NPT
1/8"	1/8" = 2
3/16"	1/4" = 3
1/4"	1/4" = 4
1/4"	1/2" = 6
3/8"	1/2" = 7
1/2"	1/2" = 8

IF VENTED = X

STI MANUFACTURING, INC.

Back to Table of Contents

STYLE 4R

SHEATH TYPE RTD WITH ARMOR AND FLEXIBLE INSULATED LEAD WIRE FOR MAXIMUM OPERATING TEMPERATURE OF 1200 DEG. F. 22 ga. LEAD WIRE STANDARD, OTHER GAUGES AVAILABLE.

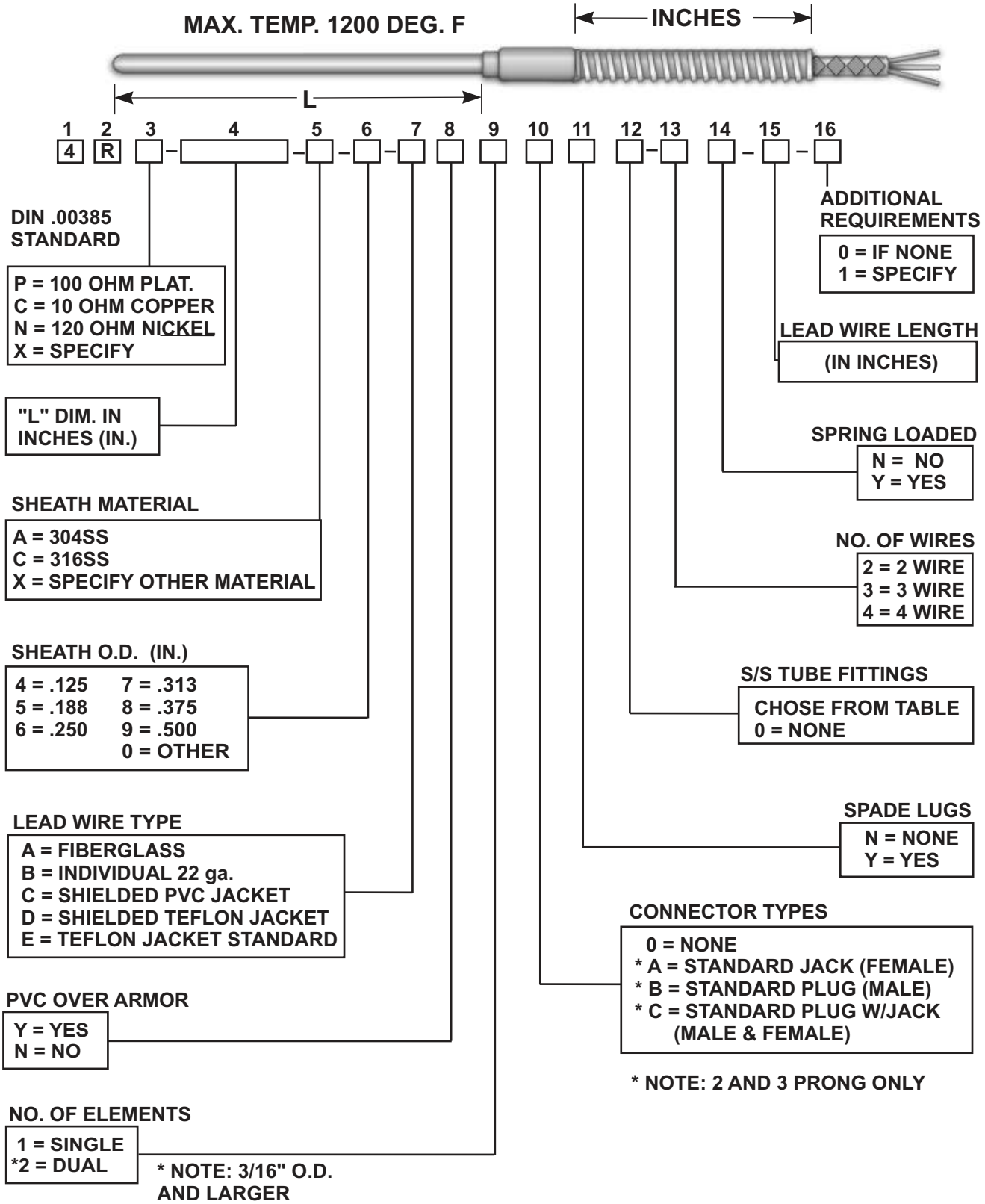

STI MANUFACTURING, INC.

Back to Table of Contents

STYLE 4R OPTIONS

QUICK DISCONNECT
CONNECTORS

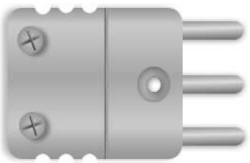

SPRING LOADING

CORD GRIPS

1/2" NPT
3/4" NPT
OTHER SIZES ARE
AVAILABLE

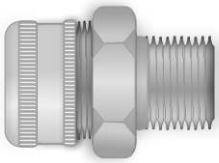

WELD PADS

1" X 1" STANDARD
SIZING AND BENDING OPTIONAL

TUBE TO PIPE FITTINGS
STAINLESS STEEL STANDARD
OTHER MATERIALS AVAILABLE

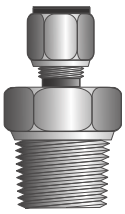

RTD O.D.	X NPT
1/8"	1/8" = 2
3/16"	1/4" = 3
1/4"	1/4" = 4
1/4"	1/2" = 6
3/8"	1/2" = 7
1/2"	1/2" = 8

IF VENTED = X

STI MANUFACTURING, INC.

Back to Table of Contents

STYLE 5R

SHEATH TUBE TYPE RTD WITH ARMOR AND FLEXIBLE INSULATED LEAD WIRE FOR MAXIMUM OPERATING TEMPERATURE OF 400 DEG. F. 22 ga. LEAD WIRE STANDARD, OTHER GAUGES AVAILABLE.

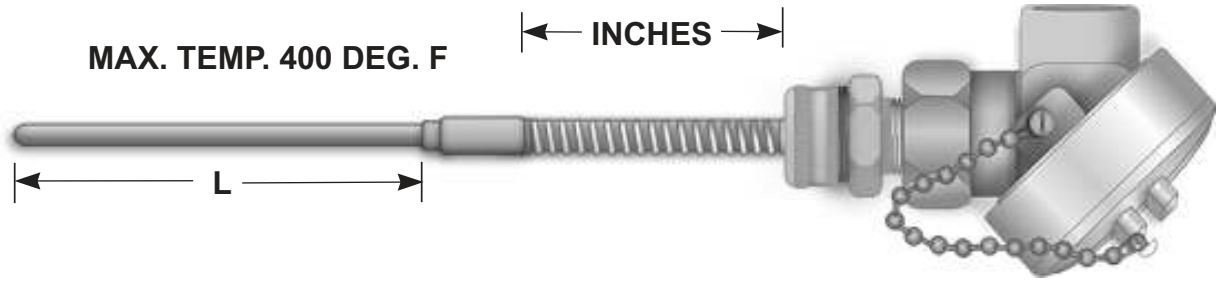

1 2 3 4 5 6 7 8 9 10 11 12 13 14 15

5 R [ ] – [ ] – [ ] – [ ] [ ] [ ] [ ] [ ] – [ ] – [ ] [ ] – [ ] – [ ]

DIN .00385 STANDARD

P = 100 OHM PLAT.
C = 10 OHM COPPER
N = 120 OHM NICKEL
X = SPECIFY

"L" DIM. IN INCHES (IN.)

TUBE MATERIAL

A = 304SS
C = 316SS
X = SPECIFY OTHER MATERIAL

TUBE O.D. (IN.)

4 = .125 7 = .313
5 = .188 8 = .375
6 = .250 9 = .500
0 = OTHER

LEAD WIRE TYPE

A = FIBERGLASS
B = INDIVIDUAL 22 ga.
C = SHIELDED PVC JACKET
D = SHIELDED TEFLON JACKET
E = TEFLON JACKET STANDARD

PVC OVER ARMOR

Y = YES
N = NO

ADDITIONAL REQUIREMENTS

0 = IF NONE
1 = SPECIFY

LEAD WIRE LENGTH

(IN INCHES)

NO. OF ELEMENTS

1 = SINGLE
*2 = DUAL

SPRING LOADED

N = NO
Y = YES

NO. OF WIRES

2 = 2 WIRE
3 = 3 WIRE
4 = 4 WIRE

S/S TUBE FITTINGS

CHOSE FROM TABLE
0 = NONE

HEADS

A = EXPLOSION PROOF
B = CAST ALUMINUM
C = CAST IRON
D = POLYPROPYLENE
E = HINGED CAST ALUMINUM
F = HINGED POLY

STI MANUFACTURING, INC.

Back to Table of Contents

STYLE 5R OPTIONS

INDUSTRIAL RTD HEADS

3/4" NPT CONDUIT
1/2" NPT INSTRUMENT

AVAILABLE
MATERIALS
CAST IRON
CAST ALUMINUM
POLYPROPYLENE
*STAINLESS STEEL
*SPECIAL ORDER

TERMINAL BLOCKS
ARE CERAMIC PORCELAIN
WITH BRASS TERMINALS

GROUND SCREWS ARE AVAILALBE- SPECIFY UNDER ADDITIONL REQUIREMENTS

EXPLOSION PROOF HEADS

3/4" NPT X 3/4" NPT PORTS
*1/2" OPTIONAL

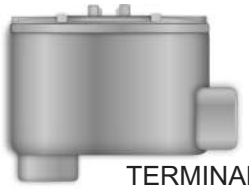

TERMINAL STRIPS
ARE PHENOLIC

AVAILABLE MATERIALS
CAST ALUMINM

INDUSTRIAL RTD HEADS
HINGED TYPE -WEATHER TIGHT SEAL
NEMA 4 RATING

3/4" NPT CONDUIT
1/2" NPT INSTRUMENT

AVAILABLE
MATERIALS
CAST ALUMINUM
POLYPROPYLENE

TERMINAL BLOCKS
ARE CERAMIC PORCELAIN
WITH BRASS TERMINALS

EXPLOSION PROOF HEADS
FMCSA CERTIFICATION
NEMA 4 RATING

3/4" NPT CONDUIT
1/2" NPT INSTRUMENT

AVAILABLE
MATERIALS
CAST ALUMINUM
*STAINLESS STEEL
*EPOXY COATED
*SPECIAL ORDER

TERMINAL BLOCKS
ARE BAKELITE

SPRING LOADING

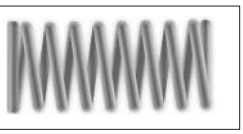

STANDARD HEX NIPPLE

1/2" NPT 316SS

OTHER MATERIALS
AND SIZES AVAILABLE

WELD PADS

1" X 1" STANDARD
SIZING AND BENDING OPTIONAL

REDUCED TIPS

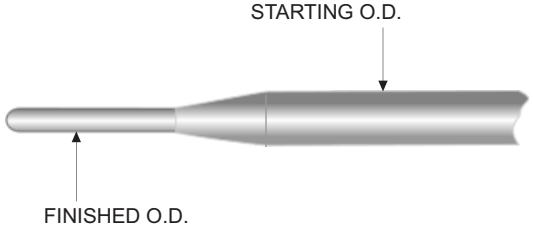

TUBE TO PIPE FITTINGS
STAINLESS STEEL STANDARD
OTHER MATERIALS AVAILABLE

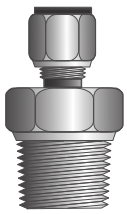

RTD O.D.	X NPT
1/8"	1/8" = 2
3/16"	1/4" = 3
1/4"	1/4" = 4
1/4"	1/2" = 6
3/8"	1/2" = 7
1/2"	1/2" = 8

IF VENTED = X

STI MANUFACTURING, INC.

Back to Table of Contents

STYLE 6R

SHEATH TYPE RTD WITH ARMOR AND FLEXIBLE INSULATED LEAD WIRE FOR MAXIMUM OPERATING TEMPERATURE OF 1200 DEG. F. 22 ga. LEAD WIRE STANDARD, OTHER GAUGES AVAILABLE.

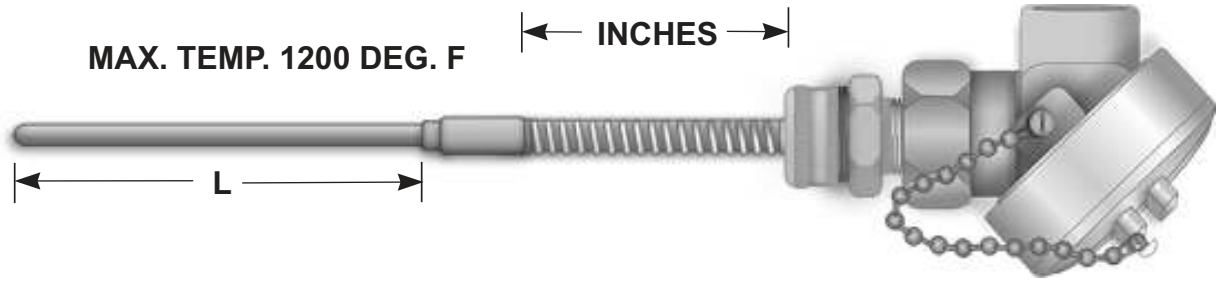

1	2	3	4	5	6	7	8	9	10	11	12	13	14	15
6	R	□	–	□	–	□	□	□	□	–	□	–	□	–	□	–	□

DIN .00385 STANDARD

P = 100 OHM PLAT.
C = 10 OHM COPPER
N = 120 OHM NICKEL
X = SPECIFY

"L" DIM. IN INCHES (IN.)

SHEATH MATERIAL

A = 304SS
C = 316SS
X = SPECIFY OTHER MATERIAL

SHEATH O.D. (IN.)

4 = .125 7 = .313
5 = .188 8 = .375
6 = .250 9 = .500
0 = OTHER

LEAD WIRE TYPE

A = FIBERGLASS
B = INDIVIDUAL 22 ga.
C = SHIELDED PVC JACKET
D = SHIELDED TEFLON JACKET
E = TEFLON JACKET STANDARD

PVC OVER ARMOR

Y = YES
N = NO

ADDITIONAL REQUIREMENTS

0 = IF NONE
1 = SPECIFY

LEAD WIRE LENGTH

(IN INCHES)

NO. OF ELEMENTS

1 = SINGLE
*2 = DUAL

SPRING LOADED

N = NO
Y = YES

NO. OF WIRES

2 = 2 WIRE
3 = 3 WIRE
4 = 4 WIRE

S/S TUBE FITTINGS

CHOSE FROM TABLE
0 = NONE

HEADS

A = EXPLOSION PROOF
B = CAST ALUMINUM
C = CAST IRON
D = POLYPROPYLENE
E = HINGED CAST ALUMINUM
F = HINGED POLY

STI MANUFACTURING, INC.

Back to Table of Contents

STYLE 6R OPTIONS

INDUSTRIAL RTD HEADS

3/4" NPT CONDUIT
1/2" NPT INSTRUMENT

AVAILABLE
MATERIALS
CAST IRON
CAST ALUMINUM
POLYPROPYLENE
*STAINLESS STEEL
*SPECIAL ORDER

TERMINAL BLOCKS
ARE CERAMIC PORCELAIN
WITH BRASS TERMINALS

GROUND SCREWS ARE AVAILALBE- SPECIFY UNDER ADDITIONL REQUIREMENTS

EXPLOSION PROOF HEADS

3/4" NPT X 3/4" NPT PORTS
*1/2" OPTIONAL

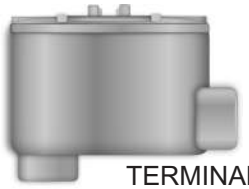

TERMINAL STRIPS
ARE PHENOLIC

AVAILABLE MATERIALS
CAST ALUMINM

INDUSTRIAL RTD HEADS
HINGED TYPE -WEATHER TIGHT SEAL
NEMA 4 RATING

3/4" NPT CONDUIT
1/2" NPT INSTRUMENT

AVAILABLE
MATERIALS
CAST ALUMINUM
POLYPROPYLENE

TERMINAL BLOCKS
ARE CERAMIC PORCELAIN
WITH BRASS TERMINALS

EXPLOSION PROOF HEADS
FMCSA CERTIFICATION
NEMA 4 RATING

3/4" NPT CONDUIT
1/2" NPT INSTRUMENT

AVAILABLE
MATERIALS
CAST ALUMINUM
*STAINLESS STEEL
*EPOXY COATED
*SPECIAL ORDER

TERMINAL BLOCKS
ARE BAKELITE

SPRING LOADING

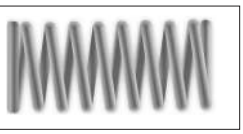

STANDARD HEX NIPPLE

1/2" NPT 316SS

OTHER MATERIALS
AND SIZES AVAILABLE

WELD PADS

1" X 1" STANDARD
SIZING AND BENDING OPTIONAL

REDUCED TIPS

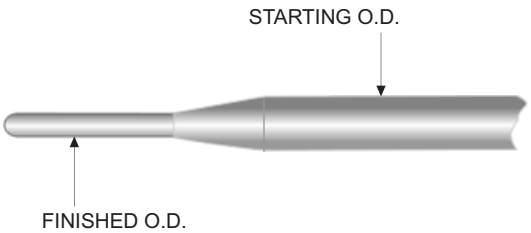

TUBE TO PIPE FITTINGS
STAINLESS STEEL STANDARD
OTHER MATERIALS AVAILABLE

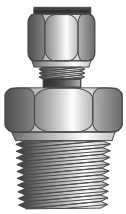

RTD O.D.	X NPT
1/8"	1/8" = 2
3/16"	1/4" = 3
1/4"	1/4" = 4
1/4"	1/2" = 6
3/8"	1/2" = 7
1/2"	1/2" = 8

IF VENTED = X

STI MANUFACTURING, INC.

Back to Table of Contents

STYLE 7RFIXED

SHEATH TUBE TYPE RTD WITH FLEXIBLE INSULATED LEAD WIRE FOR MAXIMUM OPERATING TEMPERATURE OF 400 DEG. F. 22 ga. LEAD WIRE STANDARD, OTHER GAUGES AVAILABLE.

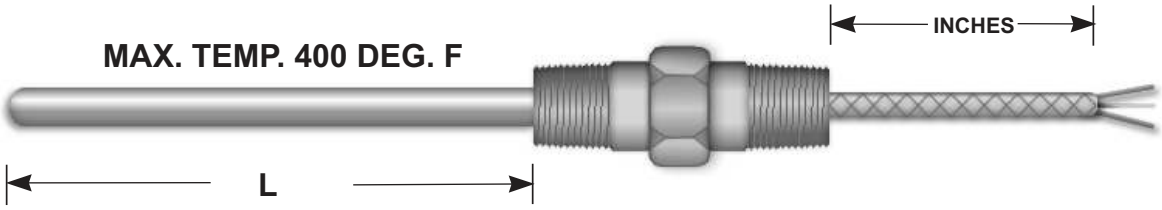

1	2	3	4	–	5	–	6	7	8	9	10	11	12	–	13	–	14
7	R	F															

DIN .00385 STANDARD

P = 100 OHM PLAT.
C = 10 OHM COPPER
N = 120 OHM NICKEL
X = SPECIFY

"L" DIM. IN INCHES (IN.)

TUBE MATERIAL

A = 304SS
C = 316SS
X = SPECIFY OTHER MATERIAL

TUBE O.D. (IN.)

4 = .125	7 = .313
5 = .188	8 = .375
6 = .250	9 = .500
	0 = OTHER

LEAD WIRE TYPE

A = FIBERGLASS
B = INDIVIDUAL 22 ga.
C = SHIELDED PVC JACKET
D = SHIELDED TEFLON JACKET
E = TEFLON JACKET STANDARD

ADDITIONAL REQUIREMENTS

0 = IF NONE
1 = SPECIFY

NO. OF ELEMENTS

1 = SINGLE
*2 = DUAL

LEAD WIRE LENGTH

(IN INCHES)

NO. OF WIRES

2 = 2 WIRE
3 = 3 WIRE
4 = 4 WIRE

HEADS

A = EXPLOSION PROOF
B = CAST ALUMINUM
C = CAST IRON
D = POLYPROPYLENE
E = HINGED CAST ALUMINUM
F = HINGED POLY

NIPPLES, UNIONS, AND HEX NIPPLES

0 = NONE
1 = N.U.N. = 6"
2 = N.U. = 4"
3 = NIPPLE = 3"
4 = HEX NIP. = 2 1/2"
5 = HEX NIP. OIL SEAL = 2"

STI MANUFACTURING, INC.

Back to Table of Contents

STYLE 7RF OPTIONS

INDUSTRIAL RTD HEADS

3/4" NPT CONDUIT
1/2" NPT INSTRUMENT

AVAILABLE
MATERIALS
CAST IRON
CAST ALUMINUM
POLYPROPYLENE
*STAINLESS STEEL
*SPECIAL ORDER

TERMINAL BLOCKS
ARE CERAMIC PORCELAIN
WITH BRASS TERMINALS

GROUND SCREWS
ARE AVAILALBE-
SPECIFY UNDER
ADDITIONL
REQUIREMENTS

EXPLOSION PROOF HEADS

3/4" NPT X 3/4" NPT PORTS
*1/2" OPTIONAL

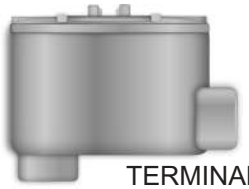

TERMINAL STRIPS
ARE PHENOLIC

AVAILABLE MATERIALS
CAST ALUMINM

INDUSTRIAL RTD HEADS
HINGED TYPE -WEATHER TIGHT SEAL
NEMA 4 RATING

3/4" NPT CONDUIT
1/2" NPT INSTRUMENT

AVAILABLE
MATERIALS
CAST ALUMINUM
POLYPROPYLENE

TERMINAL BLOCKS
ARE CERAMIC PORCELAIN
WITH BRASS TERMINALS

EXPLOSION PROOF HEADS
FMCSA CERTIFICATION
NEMA 4 RATING

3/4" NPT CONDUIT
1/2" NPT INSTRUMENT

AVAILABLE
MATERIALS
CAST ALUMINUM
*STAINLESS STEEL
*EPOXY COATED
*SPECIAL ORDER

TERMINAL BLOCKS
ARE BAKELITE

WELD PADS

1" X 1" STANDARD
SIZING AND BENDING OPTIONAL

STANDARD 1/2" NPT SCH. 40
GALVANIZED

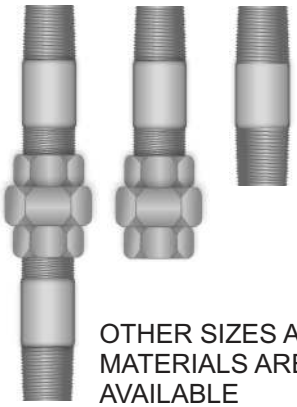

OTHER SIZES AND
MATERIALS ARE
AVAILABLE

STANDARD HEX NIPPLE

1/2" NPT 316SS

OTHER MATERIALS
AND SIZES AVAILABLE

TUBE TO PIPE FITTINGS
STAINLESS STEEL STANDARD
OTHER MATERIALS AVAILABLE

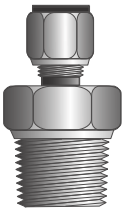

RTD O.D. X NPT	
1/8"	1/8" = 2
3/16"	1/4" = 3
1/4"	1/4" = 4
1/4"	1/2" = 6
3/8"	1/2" = 7
1/2"	1/2" = 8

IF VENTED = X

STI MANUFACTURING, INC.

Back to Table of Contents

STYLE 7RSPRING LOADED

SHEATH TUBE TYPE RTD WITH FLEXIBLE INSULATED LEAD WIRE FOR MAXIMUM OPERATING TEMPERATURE OF 400 DEG. F. 22 ga. LEAD WIRE STANDARD, OTHER GAUGES AVAILABLE.

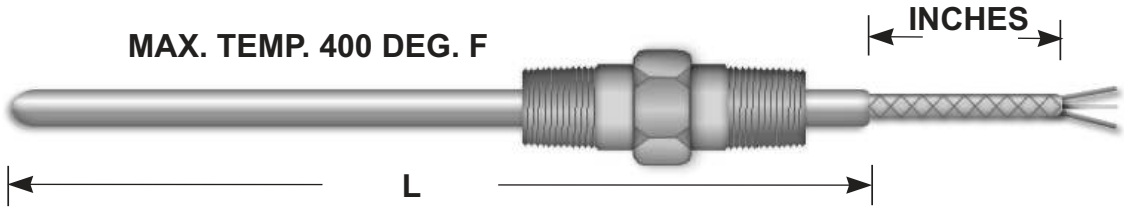

1	2	3	4	–	5	–	6	7	8	9	10	11	12	–	13	–	14	–	15
7	R	S																	

DIN .00385 STANDARD

P = 100 OHM PLAT.
C = 10 OHM COPPER
N = 120 OHM NICKEL
X = SPECIFY

"L" DIM. IN INCHES (IN.)

TUBE MATERIAL

A = 304SS
C = 316SS
X = SPECIFY OTHER MATERIAL

TUBE O.D. (IN.)

4 = .125 7 = .313
5 = .188 8 = .375
6 = .250 9 = .500
0 = OTHER

LEAD WIRE TYPE

A = FIBERGLASS
B = INDIVIDUAL 22 ga.
C = SHIELDED PVC JACKET
D = SHIELDED TEFLON JACKET
E = TEFLON JACKET STANDARD

ADDITIONAL REQUIREMENTS

0 = IF NONE
1 = SPECIFY

NO. OF ELEMENTS

1 = SINGLE
*2 = DUAL

LEAD WIRE LENGTH

(IN INCHES)

SPRING LOADED

N = NO
Y = YES

NO. OF WIRES

2 = 2 WIRE
3 = 3 WIRE
4 = 4 WIRE

HEADS

A = EXPLOSION PROOF
B = CAST ALUMINUM
C = CAST IRON
D = POLYPROPYLENE
E = HINGED CAST ALUMINUM
F = HINGED POLY

NIPPLES, UNIONS, AND HEX NIPPLES

0 = NONE
1 = N.U.N. = 6"
2 = N.U. = 4"
3 = NIPPLE = 3"
4 = HEX NIP. = 2 1/2"
5 = HEX NIP. OIL SEAL = 2"

STI MANUFACTURING, INC.

Back to Table of Contents

STYLE 7RS OPTIONS

INDUSTRIAL RTD HEADS

3/4" NPT CONDUIT
1/2" NPT INSTRUMENT

AVAILABLE
MATERIALS
CAST IRON
CAST ALUMINUM
POLYPROPYLENE
*STAINLESS STEEL
*SPECIAL ORDER

TERMINAL BLOCKS
ARE CERAMIC PORCELAIN
WITH BRASS TERMINALS

GROUND SCREWS ARE AVAILALBE-SPECIFY UNDER ADDITIONL REQUIREMENTS

EXPLOSION PROOF HEADS

3/4" NPT X 3/4" NPT PORTS
*1/2" OPTIONAL

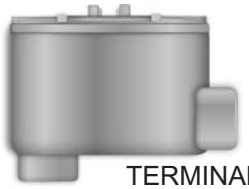

TERMINAL STRIPS
ARE PHENOLIC

AVAILABLE MATERIALS
CAST ALUMINM

INDUSTRIAL RTD HEADS
HINGED TYPE -WEATHER TIGHT SEAL
NEMA 4 RATING

3/4" NPT CONDUIT
1/2" NPT INSTRUMENT

AVAILABLE
MATERIALS
CAST ALUMINUM
POLYPROPYLENE

TERMINAL BLOCKS
ARE CERAMIC PORCELAIN
WITH BRASS TERMINALS

EXPLOSION PROOF HEADS
FMCSA CERTIFICATION
NEMA 4 RATING

3/4" NPT CONDUIT
1/2" NPT INSTRUMENT

AVAILABLE
MATERIALS
CAST ALUMINUM
*STAINLESS STEEL
*EPOXY COATED
*SPECIAL ORDER

TERMINAL BLOCKS
ARE BAKELITE

WELD PADS

1" X 1" STANDARD
SIZING AND BENDING OPTIONAL

SPRING LOADING

STANDARD 1/2" NPT SCH. 40
GALVANIZED

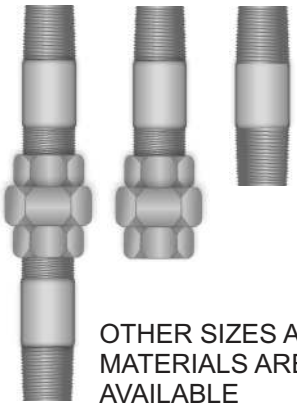

OTHER SIZES AND
MATERIALS ARE
AVAILABLE

STANDARD HEX NIPPLE

1/2" NPT 316SS

OTHER MATERIALS
AND SIZES AVAILABLE

TUBE TO PIPE FITTINGS
STAINLESS STEEL STANDARD
OTHER MATERIALS AVAILABLE

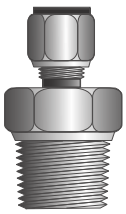

RTD O.D.	X NPT
1/8"	1/8" = 2
3/16"	1/4" = 3
1/4"	1/4" = 4
1/4"	1/2" = 6
3/8"	1/2" = 7
1/2"	1/2" = 8

IF VENTED = X

STI MANUFACTURING, INC.

Back to Table of Contents

STYLE 8RFIXED

SHEATH TYPE RTD WITH FLEXIBLE INSULATED LEAD WIRE FOR MAXIMUM OPERATING TEMPERATURE OF 1200 DEG. F. 22 ga. LEAD WIRE STANDARD, OTHER GAUGES AVAILABLE.

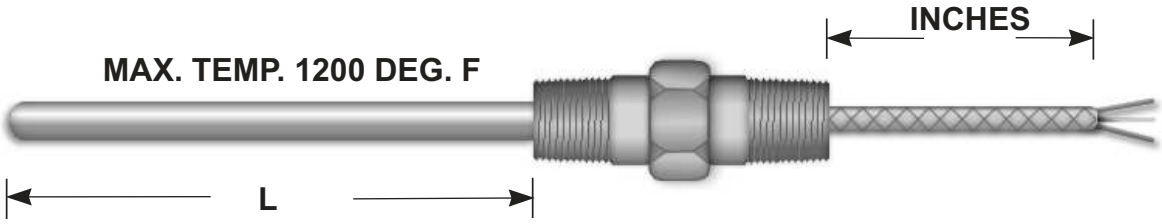

1	2	3	4	–	5	–	6	7	8	9	10	11	12	–	13	–	14
8	R	F															

DIN .00385 STANDARD

P = 100 OHM PLAT.
C = 10 OHM COPPER
N = 120 OHM NICKEL
X = SPECIFY

"L" DIM. IN INCHES (IN.)

SHEATH MATERIAL

A = 304SS
C = 316SS
X = SPECIFY OTHER MATERIAL

SHEATH O.D. (IN.)

4 = .125 7 = .313
5 = .188 8 = .375
6 = .250 9 = .500
0 = OTHER

LEAD WIRE TYPE

A = FIBERGLASS
B = INDIVIDUAL 22 ga.
C = SHIELDED PVC JACKET
D = SHIELDED TEFLON JACKET
E = TEFLON JACKET STANDARD

ADDITIONAL REQUIREMENTS

0 = IF NONE
1 = SPECIFY

NO. OF ELEMENTS

1 = SINGLE
*2 = DUAL

LEAD WIRE LENGTH

(IN INCHES)

NO. OF WIRES

2 = 2 WIRE
3 = 3 WIRE
4 = 4 WIRE

HEADS

A = EXPLOSION PROOF
B = CAST ALUMINUM
C = CAST IRON
D = POLYPROPYLENE
E = HINGED CAST ALUMINUM
F = HINGED POLY

NIPPLES, UNIONS, AND HEX NIPPLES

0 = NONE
1 = N.U.N. = 6"
2 = N.U. = 4"
3 = NIPPLE = 3"
4 = HEX NIP. = 2 1/2"
5 = HEX NIP. OIL SEAL = 2"

STI MANUFACTURING, INC.

Back to Table of Contents

STYLE 8RF OPTIONS

INDUSTRIAL RTD HEADS

3/4" NPT CONDUIT
1/2" NPT INSTRUMENT

AVAILABLE
MATERIALS
CAST IRON
CAST ALUMINUM
POLYPROPYLENE
*STAINLESS STEEL
*SPECIAL ORDER

TERMINAL BLOCKS
ARE CERAMIC PORCELAIN
WITH BRASS TERMINALS

GROUND SCREWS
ARE AVAILALBE-
SPECIFY UNDER
ADDITIONL
REQUIREMENTS

EXPLOSION PROOF HEADS

3/4" NPT X 3/4" NPT PORTS
*1/2" OPTIONAL

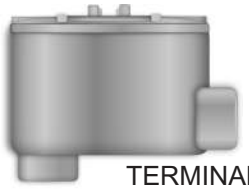

TERMINAL STRIPS
ARE PHENOLIC

AVAILABLE MATERIALS
CAST ALUMINM

INDUSTRIAL RTD HEADS
HINGED TYPE -WEATHER TIGHT SEAL
NEMA 4 RATING

3/4" NPT CONDUIT
1/2" NPT INSTRUMENT

AVAILABLE
MATERIALS
CAST ALUMINUM
POLYPROPYLENE

TERMINAL BLOCKS
ARE CERAMIC PORCELAIN
WITH BRASS TERMINALS

EXPLOSION PROOF HEADS
FMCSA CERTIFICATION
NEMA 4 RATING

3/4" NPT CONDUIT
1/2" NPT INSTRUMENT

AVAILABLE
MATERIALS
CAST ALUMINUM
*STAINLESS STEEL
*EPOXY COATED
*SPECIAL ORDER

TERMINAL BLOCKS
ARE BAKELITE

WELD PADS

1" X 1" STANDARD
SIZING AND BENDING OPTIONAL

STANDARD 1/2" NPT SCH. 40
GALVANIZED

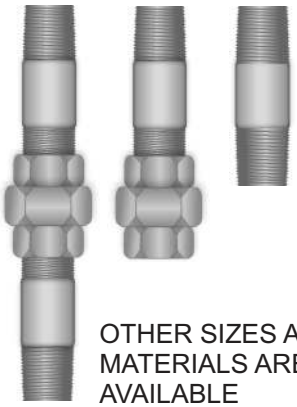

OTHER SIZES AND
MATERIALS ARE
AVAILABLE

STANDARD HEX NIPPLE

1/2" NPT 316SS

OTHER MATERIALS
AND SIZES AVAILABLE

TUBE TO PIPE FITTINGS
STAINLESS STEEL STANDARD
OTHER MATERIALS AVAILABLE

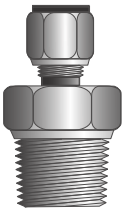

RTD O.D.	X NPT
1/8"	1/8" = 2
3/16"	1/4" = 3
1/4"	1/4" = 4
1/4"	1/2" = 6
3/8"	1/2" = 7
1/2"	1/2" = 8

IF VENTED = X

STI MANUFACTURING, INC.

Back to Table of Contents

STYLE 8RSPRING LOADED

SHEATH TYPE RTD WITH FLEXIBLE INSULATED LEAD WIRE FOR MAXIMUM OPERATING TEMPERATURE OF 1200 DEG. F. 22 ga. LEAD WIRE STANDARD, OTHER GAUGES AVAILABLE.

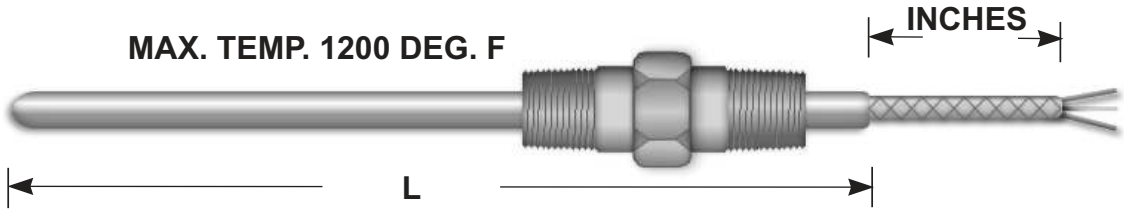

1	2	3	4	–	5	–	6	7	8	9	10	11	12	–	13	–	14	–	15
8	R	S																	

DIN .00385 STANDARD

P = 100 OHM PLAT.
C = 10 OHM COPPER
N = 120 OHM NICKEL
X = SPECIFY

"L" DIM. IN INCHES (IN.)

SHEATH MATERIAL

A = 304SS
C = 316SS
X = SPECIFY OTHER MATERIAL

SHEATH O.D. (IN.)

4 = .125 7 = .313
5 = .188 8 = .375
6 = .250 9 = .500
0 = OTHER

LEAD WIRE TYPE

A = FIBERGLASS
B = INDIVIDUAL 22 ga.
C = SHIELDED PVC JACKET
D = SHIELDED TEFLON JACKET
E = TEFLON JACKET STANDARD

ADDITIONAL REQUIREMENTS

0 = IF NONE
1 = SPECIFY

NO. OF ELEMENTS

1 = SINGLE
*2 = DUAL

LEAD WIRE LENGTH

(IN INCHES)

SPRING LOADED

N = NO
Y = YES

NO. OF WIRES

2 = 2 WIRE
3 = 3 WIRE
4 = 4 WIRE

HEADS

A = EXPLOSION PROOF
B = CAST ALUMINUM
C = CAST IRON
D = POLYPROPYLENE
E = HINGED CAST ALUMINUM
F = HINGED POLY

NIPPLES, UNIONS, AND HEX NIPPLES

0 = NONE
1 = N.U.N. = 6"
2 = N.U. = 4"
3 = NIPPLE = 3"
4 = HEX NIP. = 2 1/2"
5 = HEX NIP. OIL SEAL = 2"

STI MANUFACTURING, INC.

Back to Table of Contents

STYLE 8RS OPTIONS

INDUSTRIAL RTD HEADS

3/4" NPT CONDUIT
1/2" NPT INSTRUMENT

AVAILABLE
MATERIALS
CAST IRON
CAST ALUMINUM
POLYPROPYLENE
*STAINLESS STEEL
*SPECIAL ORDER

TERMINAL BLOCKS
ARE CERAMIC PORCELAIN
WITH BRASS TERMINALS

GROUND SCREWS ARE AVAILALBE-SPECIFY UNDER ADDITIONL REQUIREMENTS

EXPLOSION PROOF HEADS

3/4" NPT X 3/4" NPT PORTS
*1/2" OPTIONAL

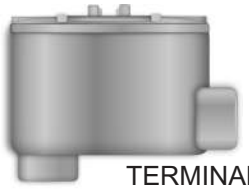

TERMINAL STRIPS
ARE PHENOLIC

AVAILABLE MATERIALS
CAST ALUMINM

INDUSTRIAL RTD HEADS
HINGED TYPE -WEATHER TIGHT SEAL
NEMA 4 RATING

3/4" NPT CONDUIT
1/2" NPT INSTRUMENT

AVAILABLE
MATERIALS
CAST ALUMINUM
POLYPROPYLENE

TERMINAL BLOCKS
ARE CERAMIC PORCELAIN
WITH BRASS TERMINALS

EXPLOSION PROOF HEADS
FMCSA CERTIFICATION
NEMA 4 RATING

3/4" NPT CONDUIT
1/2" NPT INSTRUMENT

AVAILABLE
MATERIALS
CAST ALUMINUM
*STAINLESS STEEL
*EPOXY COATED
*SPECIAL ORDER

TERMINAL BLOCKS
ARE BAKELITE

WELD PADS

1" X 1" STANDARD
SIZING AND BENDING OPTIONAL

SPRING LOADING

STANDARD 1/2" NPT SCH. 40
GALVANIZED

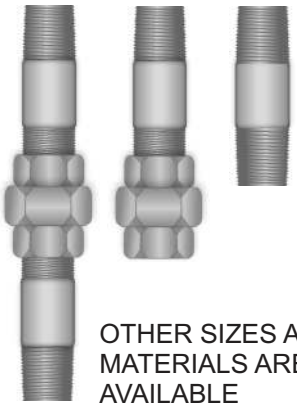

OTHER SIZES AND
MATERIALS ARE
AVAILABLE

STANDARD HEX NIPPLE

1/2" NPT 316SS

OTHER MATERIALS
AND SIZES AVAILABLE

TUBE TO PIPE FITTINGS
STAINLESS STEEL STANDARD
OTHER MATERIALS AVAILABLE

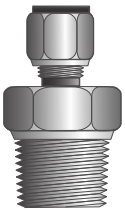

RTD O.D.	X NPT
1/8"	1/8" = 2
3/16"	1/4" = 3
1/4"	1/4" = 4
1/4"	1/2" = 6
3/8"	1/2" = 7
1/2"	1/2" = 8

IF VENTED = X

STI MANUFACTURING, INC.

Back to Table of Contents

STYLE 9R CUTTABLE

SHEATH TUBE TYPE RTD WITH FLEXIBLE INSULATED LEAD WIRE FOR MAXIMUM OPERATING TEMPERATURE OF 260 DEG. F. 22 ga. LEAD WIRE STANDARD, OTHER GAUGES AVAILABLE.

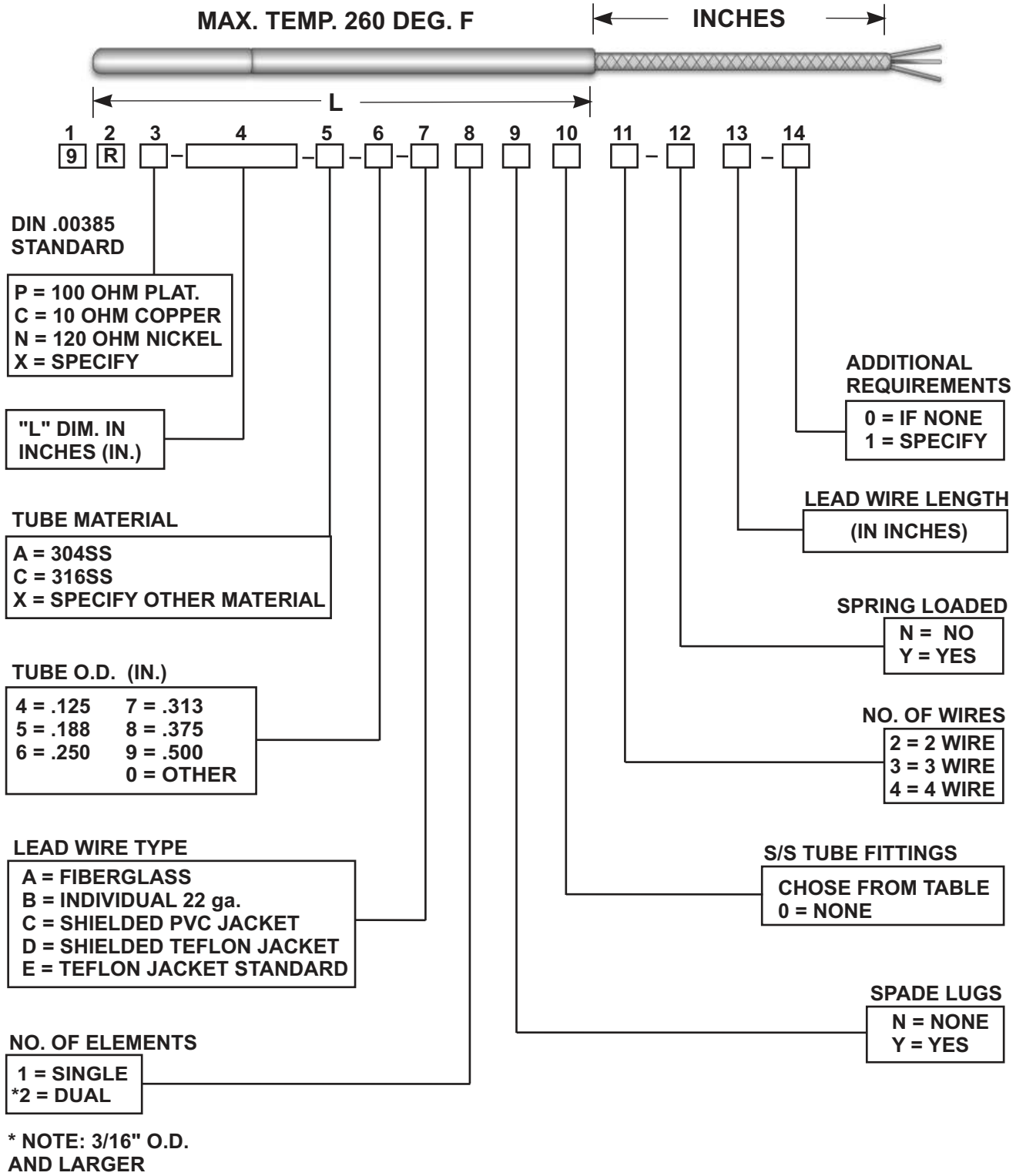

Back to Table of Contents

SPRING LOADING

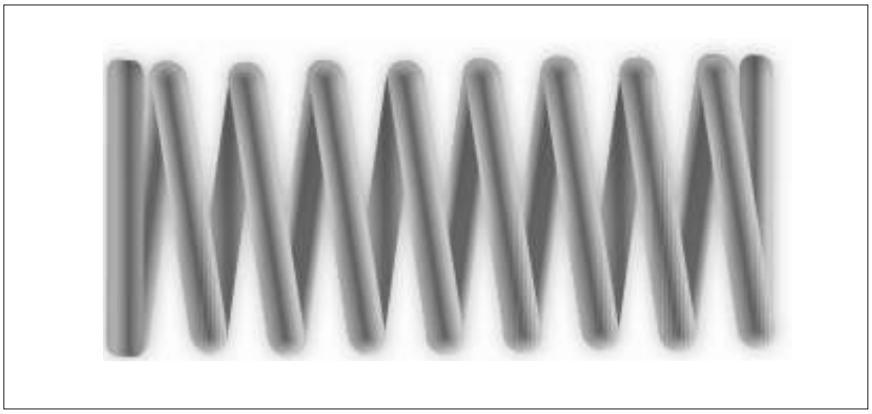

INTENTIONALLY LEFT BLANK

STI MANUFACTURING, INC.

STI Manufacturing, Inc. uses the D.I.N. standard with a Temperature Coefficient of 0.00385-ohm ohm-1 Deg. C -1 with a base resistance of 100.00 ohms at 0 Deg. C for the STI standard Platinum RTD.

Custom RTDs manufactured to meet other recognized standards such as SAMA RC-4-1966 and JIS C1604-1981 are also available for Platinum RTDs.

STI Manufacturing, Inc. utilizes a standard color code of WHITE vs. RED for 2 wire RTDs, WHITE/WHITE vs. Red for 3 wire RTDs and WHITE/WHITE vs. RED/RED for 4 wire RTDs. In the case of Dual element RTDs, the color code for the alternate element is BLACK vs Green. Custom color coding is available upon request.

All RTDs manufactured by STI are tested at 0 Deg. C with crushed ice temperature bath, by a calibrated meter to 4 1/2 digits. A tag marked wtih the test Ohm reading is attached to each sensor.

INTENTIONALLY LEFT BLANK

STI MANUFACTURING, INC.

The Thermowells Displayed in our catalog are standard lengths for bi-metallic Thermometers. We also manufacture wells for Thermocouples and RTDs. *STI MANUFACTURING, INC*. will be pleased to quote your custom requirements and additionally provide our high standard of quality to the following specificatins:

* Certification of NACE MR-01-75	
* Extensive Bore Sizes	
* Pipe Protection Tubes	
* Tantalum Sheaths	
* Coating Finishes	Alumina Oxide, Colmonoy, Kynar Stellite, Tantalum, Teflon, and others
* Exotic Materials	Hast. C, Hast. B, Monel, Nickel, Titanium, Zirconium, and other Exotics
* Sanitary Wells	Thermowells that are certified to the 3A Sanitary Standard #690
* Testing Procedures	Calculations, Dye Penetrate, PMI, X-Ray and others, available on request
* Material Test Reports	(MTRs) Available on request

Our standard delivery policy is 2 weeks after receipt of order. However, if you require a "RUSH" delivery, we will provide that service as well.

STANDARD THREADED THERMOWELLS

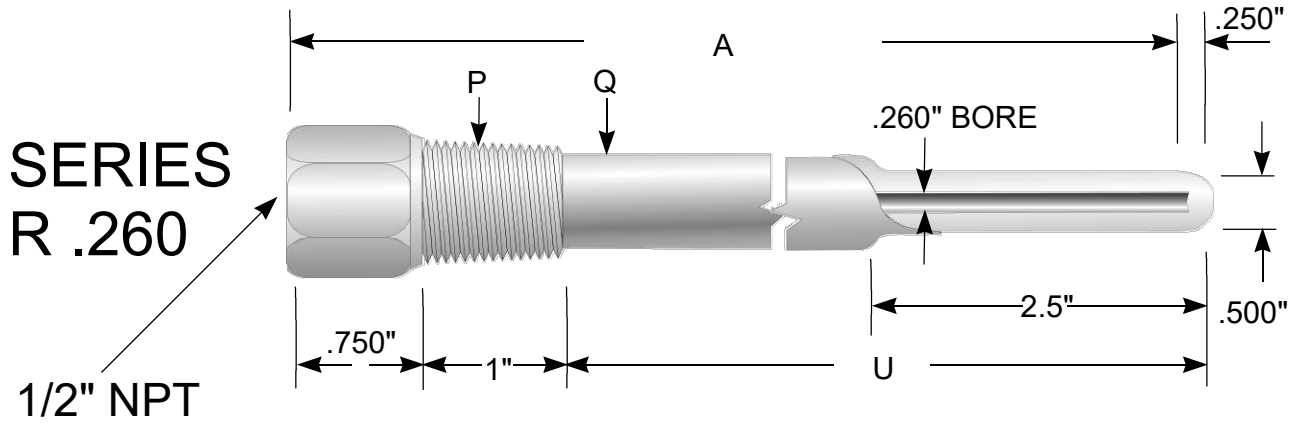

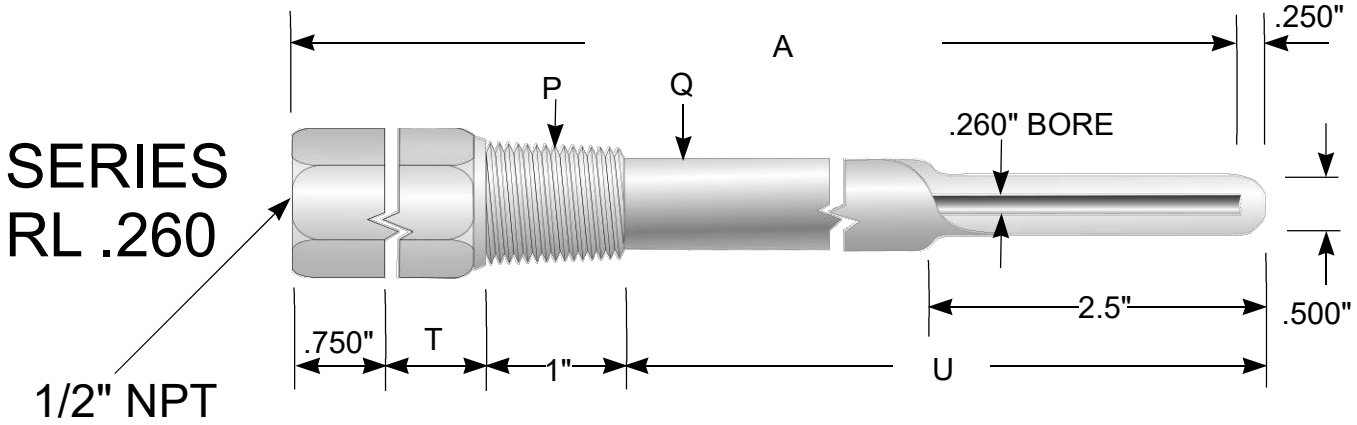

EXAMPLE

SERIES R .260

EXTERNAL THREAD P	CODE NUMBER	INSERT LENGTH U	STEM LGTH A	SHANK DIA Q
1/2" NPT	1/2"-R .260-U 2 1/2	2-1/2"	4"	1/2"
		4-1/2"	6"	5/8"
		7-1/2"	9"	5/8"
		10-1/2"	12"	5/8"
		13-1/2"	15"	5/8"
		16-1/2"	18"	5/8"
		22-1/2"	24"	5/8"
3/4" NPT	3/4"-R .260-U 2 1/2	2-1/2"	4"	1/2"
		4-1/2"	6"	3/4"
		7-1/2"	9"	3/4"
		10-1/2"	12"	3/4"
		13-1/2"	15"	3/4"
		16-1/2"	18"	3/4"
		22-1/2"	24"	3/4"
1" NPT	1"-R .260-U 2 1/2	2-1/2"	4"	1/2"
		4-1/2"	6"	7/8"
		7-1/2"	9"	7/8"
		10-1/2"	12"	7/8"
		13-1/2"	15"	7/8"
		16-1/2"	18"	7/8"
		22-1/2"	24"	7/8"

SERIES RL .260

EXTERNAL THREAD P	CODE NUMBER	INSERT LENGTH U	STEM LGTH A	LAG EXT. T	SHANK DIA Q
1/2" NPT	1/2"-RL .260-U 2 1/2	2-1/2"	6"	T2	1/2"
		4-1/2"	9"	T3	5/8"
		7-1/2"	12"	T3	5/8"
		10-1/2"	15"	T3	5/8"
		13-1/2"	18"	T3	5/8"
		19-1/2"	24"	T3	5/8"
3/4" NPT	3/4"-RL .260-U 2 1/2	2-1/2"	6"	T2	1/2"
		4-1/2"	9"	T3	3/4"
		7-1/2"	12"	T3	3/4"
		10-1/2"	15"	T3	3/4"
		13-1/2"	18"	T3	3/4"
		19-1/2"	24"	T3	3/4"
1" NPT	1"-RL .260-U 2 1/2	2-1/2"	6"	T2	1/2"
		4-1/2"	9"	T3	7/8"
		7-1/2"	12"	T3	7/8"
		10-1/2"	15"	T3	7/8"
		13-1/2"	18"	T3	7/8"
		19-1/2"	24"	T3	7/8"

STANDARD THREADED THERMOWELLS

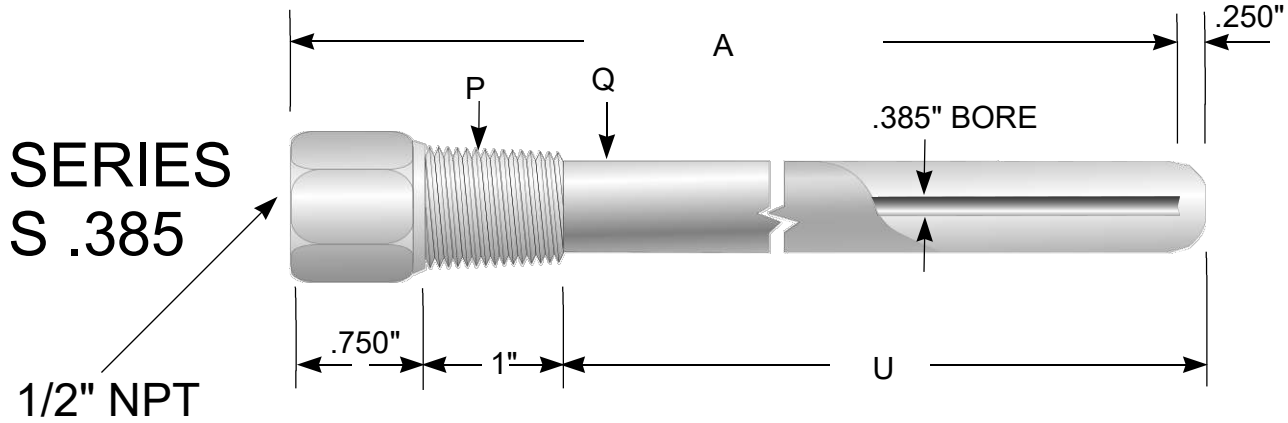

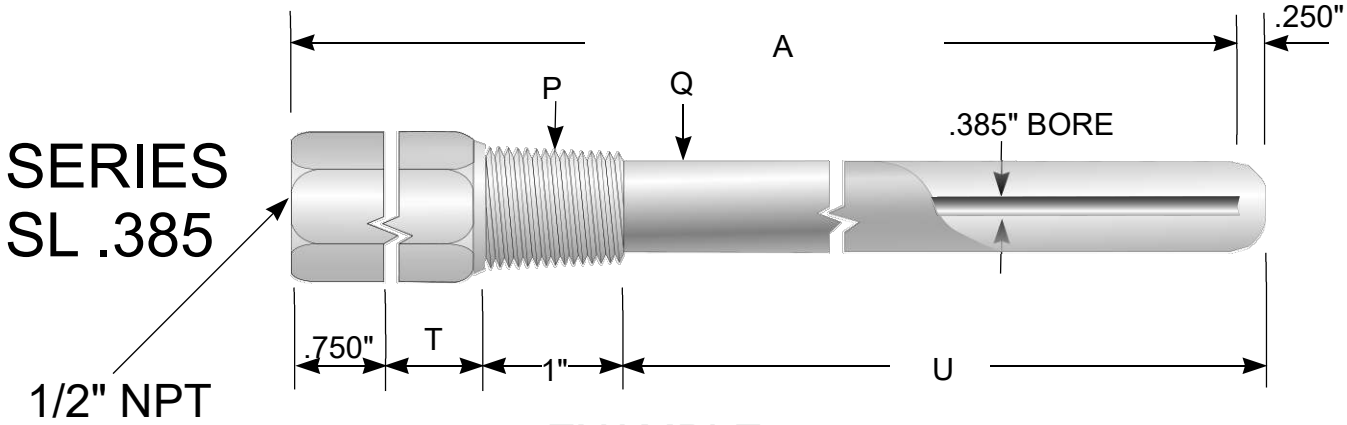

EXAMPLE

SERIES S .385

EXTERNAL THREAD P	CODE NUMBER	INSERT LENGTH U	STEM LGTH A	SHANK DIA Q
3/4" NPT	3/4"-S .385-U 2 1/2	2-1/2"	4"	49/64"
		4-1/2"	6"	49/64"
		7-1/2"	9"	49/64"
		10-1/2"	12"	49/64"
		13-1/2"	15"	49/64"
		16-1/2"	18"	49/64"
		22-1/2"	24"	49/64"
1" NPT	1"-S .385-U 2 1/2	2-1/2"	4"	7/8"
		4-1/2"	6"	7/8"
		7-1/2"	9"	7/8"
		10-1/2"	12"	7/8"
		13-1/2"	15"	7/8"
		16-1/2"	18"	7/8"
		22-1/2"	24"	7/8"

SERIES SL .385

EXTERNAL THREAD P	CODE NUMBER	INSERT LENGTH U	STEM LGTH A	LAG EXT. T	SHANK DIA Q
3/4" NPT	3/4"-SL .385-U 2 1/2	2-1/2"	6"	T2	49/64"
		4-1/2"	9"	T3	49/64"
		7-1/2"	12"	T3	49/64"
		10-1/2"	15"	T3	49/64"
		13-1/2"	18"	T3	49/64"
		19-1/2"	24"	T3	49/64"
					49/64"
1" NPT	1"-SL .385-U 2 1/2	2-1/2"	6"	T2	7/8"
		4-1/2"	9"	T3	7/8"
		7-1/2"	12"	T3	7/8"
		10-1/2"	15"	T3	7/8"
		13-1/2"	18"	T3	7/8"
		19-1/2"	24"	T3	7/8"
					7/8"

HEAVY DUTY THREADED THERMOWELLS

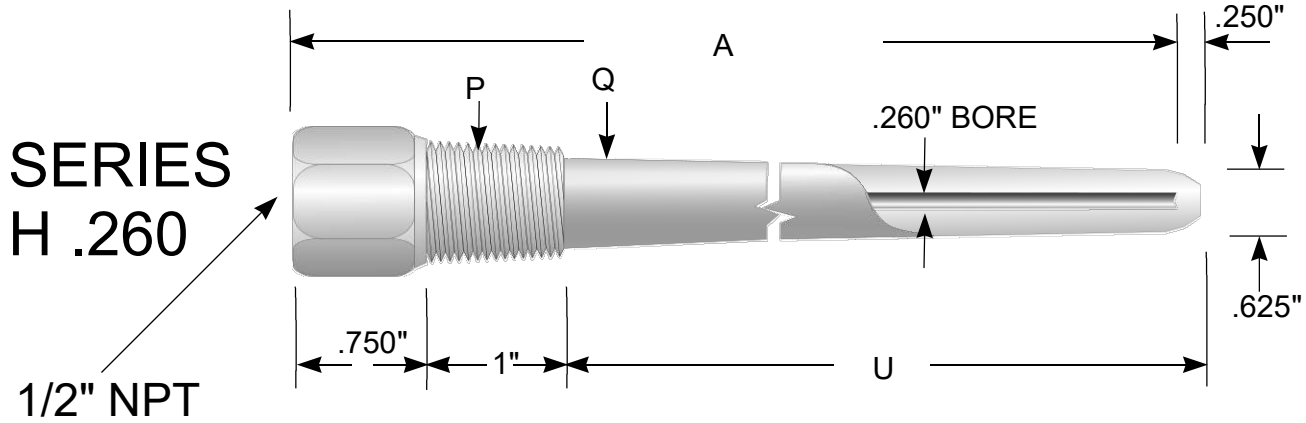

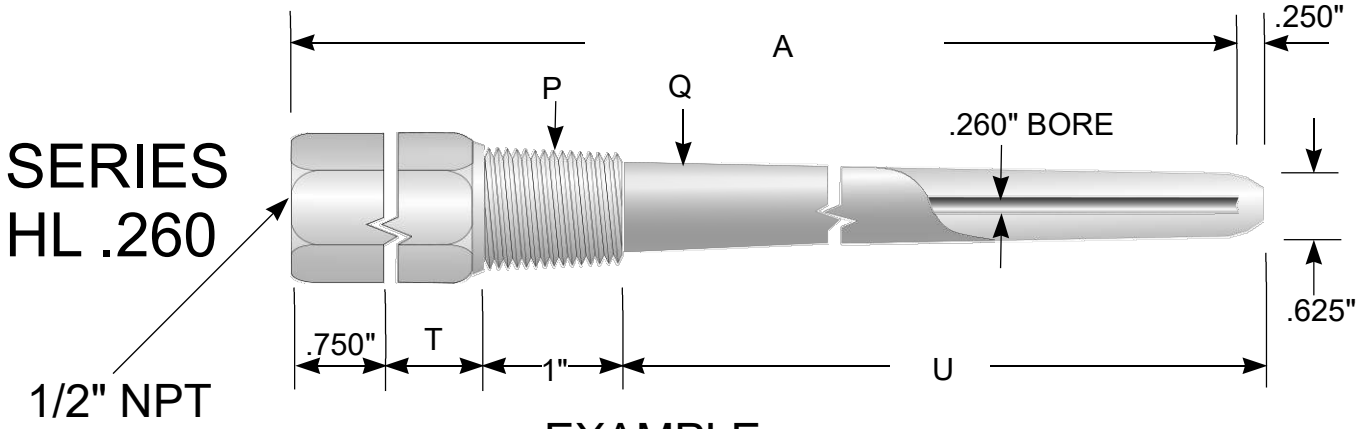

EXAMPLE

SERIES H .260

EXTERNAL THREAD P	CODE NUMBER	INSERT LENGTH U	STEM LGTH A	SHANK DIA Q
3/4" NPT	3/4"-H .260-U 2 1/2	2-1/2"	4"	7/8"
		4-1/2"	6"	7/8"
		7-1/2"	9"	7/8"
		10-1/2"	12"	7/8"
		13-1/2"	15"	7/8"
		16-1/2"	18"	7/8"
		22-1/2"	24"	7/8"
1" NPT	1"-H .260-U 2 1/2	2-1/2"	4"	1-1/16"
		4-1/2"	6"	1-1/16"
		7-1/2"	9"	1-1/16"
		10-1/2"	12"	1-1/16"
		13-1/2"	15"	1-1/16"
		16-1/2"	18"	1-1/16"
		22-1/2"	24"	1-1/16"

SERIES HL .260

EXTERNAL THREAD P	CODE NUMBER	INSERT LENGTH U	STEM LGTH A	LAG EXT. T	SHANK DIA Q
3/4" NPT	3/4"-HL .260-U 2 1/2	2-1/2"	6"	T2	7/8"
		4-1/2"	9"	T3	7/8"
		7-1/2"	12"	T3	7/8"
		10-1/2"	15"	T3	7/8"
		13-1/2"	18"	T3	7/8"
		19-1/2"	24"	T3	7/8"
1" NPT	1"-HL .260-U 2 1/2	2-1/2"	6"	T2	1-1/16"
		4-1/2"	9"	T3	1-1/16"
		7-1/2"	12"	T3	1-1/16"
		10-1/2"	15"	T3	1-1/16"
		13-1/2"	18"	T3	1-1/16"
		19-1/2"	24"	T3	1-1/16"

STI MANUFACTURING, INC.

HEAVY DUTY THREADED THERMOWELLS

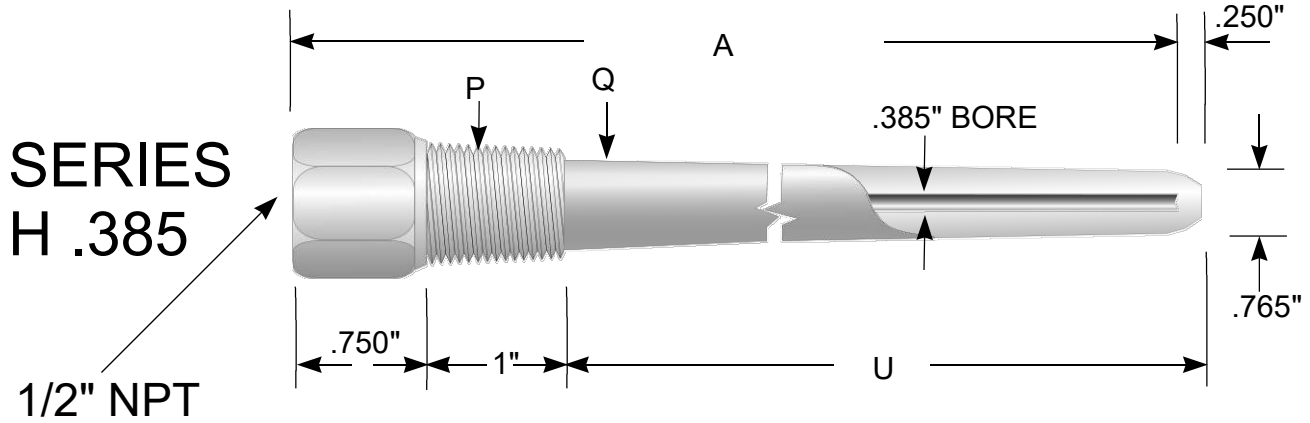

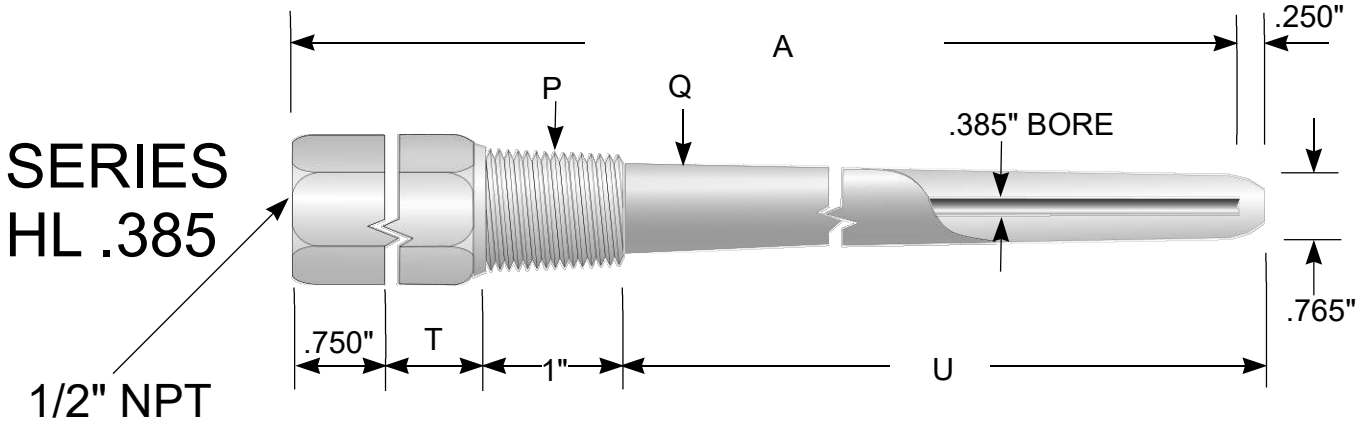

EXAMPLE

SERIES H .385

EXTERNAL THREAD P	CODE NUMBER	INSERT LENGTH U	STEM LGTH A	SHANK DIA Q
3/4" NPT	3/4"-H .385-U 2 1/2	2-1/2"	4"	7/8"
		4-1/2"	6"	7/8"
		7-1/2"	9"	7/8"
		10-1/2"	12"	7/8"
		13-1/2"	15"	7/8"
		16-1/2"	18"	7/8"
		22-1/2"	24"	7/8"
1" NPT	1"-H .385-U 2 1/2	2-1/2"	4"	1-1/16"
		4-1/2"	6"	1-1/16"
		7-1/2"	9"	1-1/16"
		10-1/2"	12"	1-1/16"
		13-1/2"	15"	1-1/16"
		16-1/2"	18"	1-1/16"
		22-1/2"	24"	1-1/16"

SERIES HL .385

EXTERNAL THREAD P	CODE NUMBER	INSERT LENGTH U	STEM LGTH A	LAG EXT. T	SHANK DIA Q
3/4" NPT	3/4"-HL .385-U 2 1/2	2-1/2"	6"	T2	7/8"
		4-1/2"	9"	T3	7/8"
		7-1/2"	12"	T3	7/8"
		10-1/2"	15"	T3	7/8"
		13-1/2"	18"	T3	7/8"
		19-1/2"	24"	T3	7/8"
1" NPT	1"-HL .385-U 2 1/2	2-1/2"	6"	T2	1-1/16"
		4-1/2"	9"	T3	1-1/16"
		7-1/2"	12"	T3	1-1/16"
		10-1/2"	15"	T3	1-1/16"
		13-1/2"	18"	T3	1-1/16"
		19-1/2"	24"	T3	1-1/16"

STI MANUFACTURING, INC.

FLANGED THERMOWELLS

SERIES FR .260

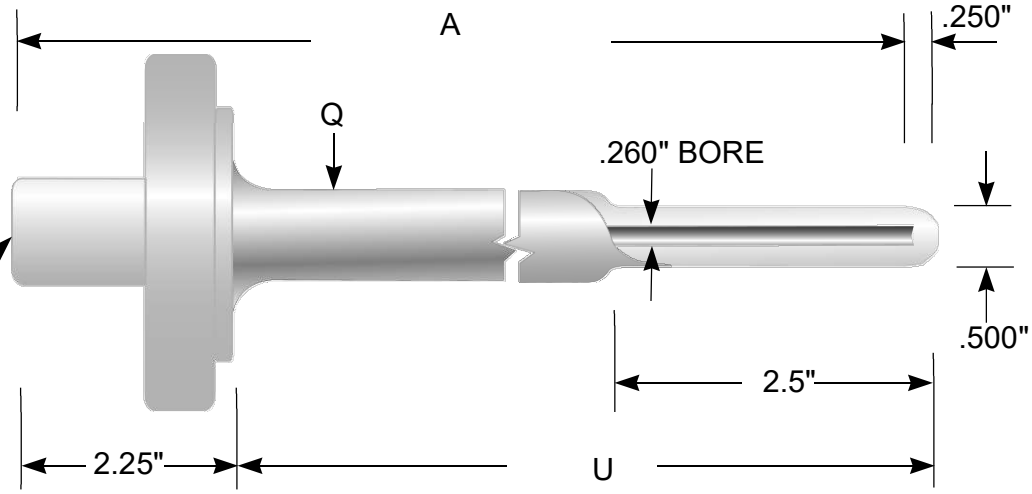

SERIES FS .260 OR FS .385

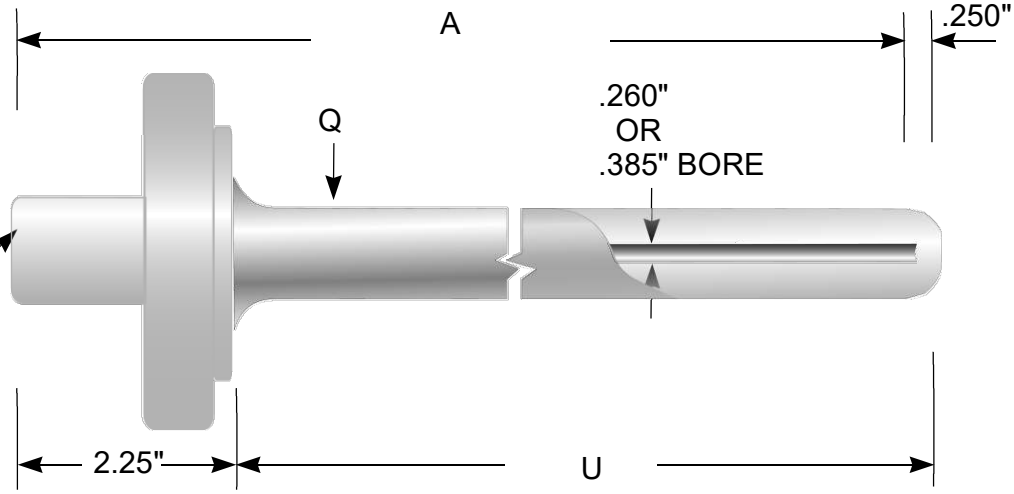

EXAMPLE

SERIES FR .260

CODE NUMBER	INSERT LENGTH U	STEM LGTH A	SHANK DIA Q
FR .260-U 2	2"	4"	3/4"
	4"	6"	3/4"
	7"	9"	3/4"
	10"	12"	3/4"
	13"	15"	3/4"
	16"	18"	3/4"
	22"	24"	3/4"

SERIES FS .260 OR .385

CODE NUMBER	INSERT LENGTH U	STEM LGTH A	SHANK DIA Q
FS .260-U 2	2"	4"	7/8"
OR	4"	6"	7/8"
FS .385-U 2	7"	9"	7/8"
	10"	12"	7/8"
	13"	15"	7/8"
	16"	18"	7/8"
	22"	24"	7/8"

SPECIFY FLANGE SIZE, RATING, AND MATERIAL.
FLANGES ARE STANDARD WELD UNLESS SPECIFIED.

STI MANUFACTURING, INC.

FLANGED THERMOWELLS

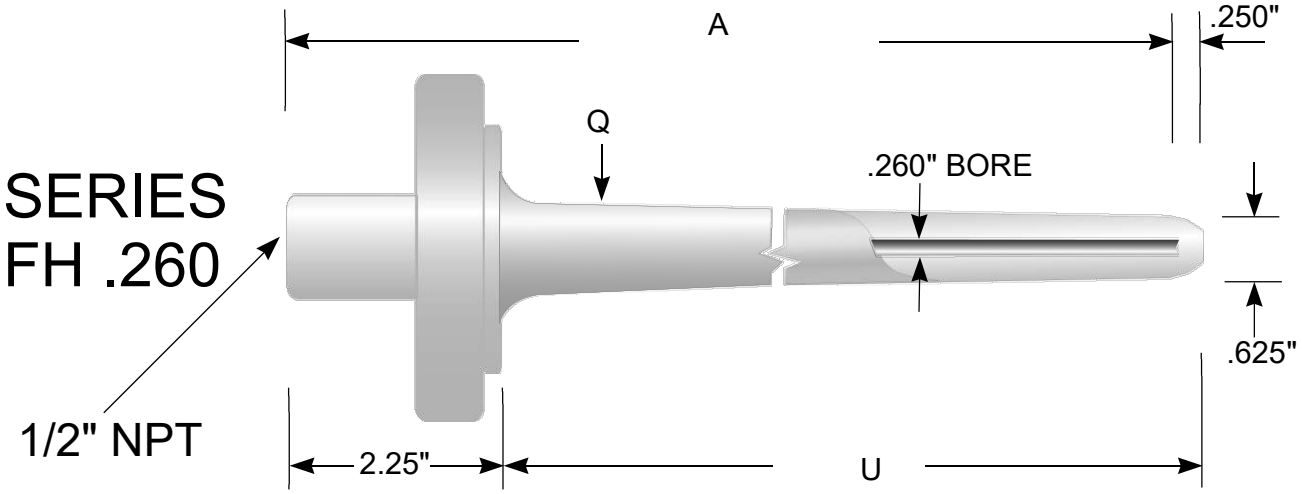

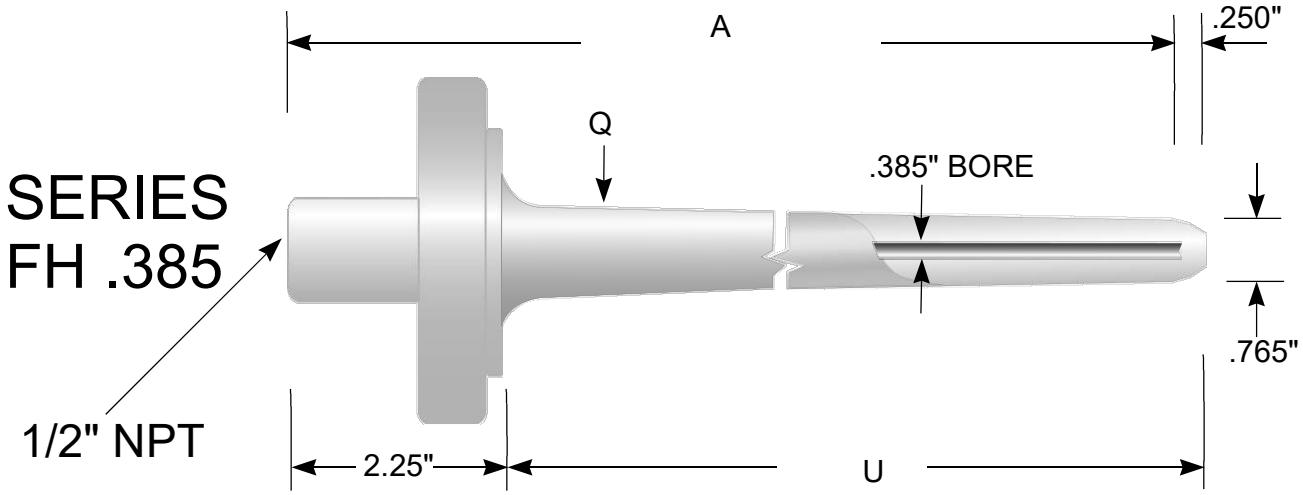

EXAMPLE

SERIES FH .260

CODE NUMBER	INSERT LENGTH U	STEM LGTH A	SHANK DIA Q
FH .260-U 2	2" 4" 7" 10" 13" 16" 22"	4" 6" 9" 12" 15" 18" 24"	1" FLANGE & SMALLER Q=7/8" ---------- 1 1/2" FLANGE & LARGER Q= 1 1/16"

SERIES FH .385

CODE NUMBER	INSERT LENGTH U	STEM LGTH A	SHANK DIA Q
FH .385-U 2	2" 4" 7" 10" 13" 16" 22"	4" 6" 9" 12" 15" 18" 24"	1" FLANGE & SMALLER Q=7/8" ---------- 1 1/2" FLANGE & LARGER Q= 1 1/16"

SPECIFY FLANGE SIZE, RATING, AND MATERIAL.
FLANGES ARE STANDARD WELD UNLESS SPECIFIED.

STI MANUFACTURING, INC.

SOCKET-WELD THERMOWELLS

SERIES SWR .260

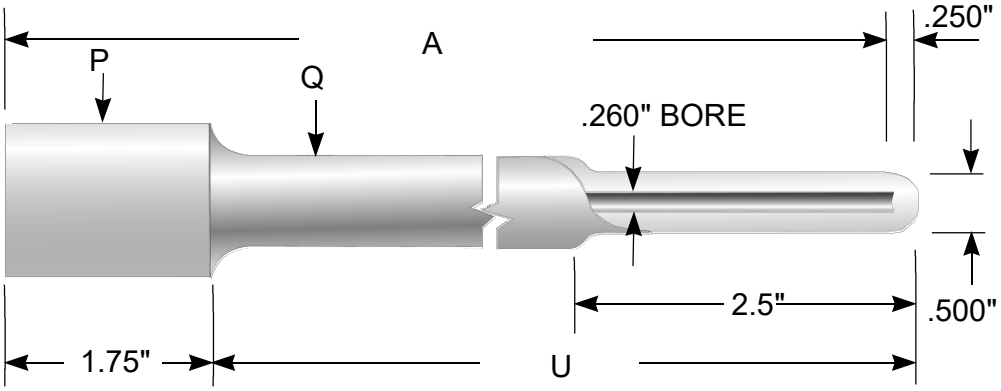

1/2" NPT

SERIES SWS .385

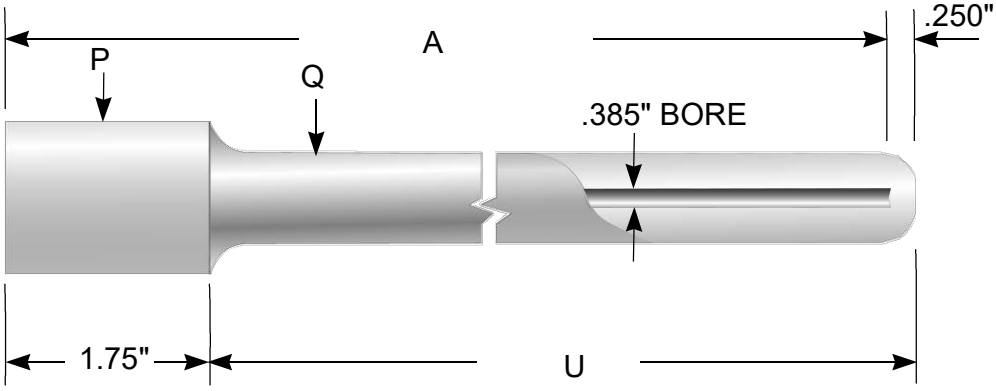

1/2" NPT

EXAMPLE

SERIES SWR .260

PIPE SIZE P	CODE NUMBER	INSERT LENGTH U	STEM LGTH A	SHANK DIA Q
3/4" NOMINAL (1.050" DIA.)	3/4"-SWR .260-U 2 1/2	2-1/2"	4"	1/2"
		4-1/2"	6"	3/4"
		7-1/2"	9"	3/4"
		10-1/2"	12"	3/4"
		13-1/2"	15"	3/4"
		16-1/2"	18"	3/4"
		22-1/2"	24"	3/4"
1" NOMINAL (1.315" DIA.)	1"-SWR .260-U 2 1/2	2-1/2"	4"	3/4"
		4-1/2"	6"	7/8"
		7-1/2"	9"	7/8"
		10-1/2"	12"	7/8"
		13-1/2"	15"	7/8"
		16-1/2"	18"	7/8"
		22-1/2"	24"	7/8"

SERIES SWS .385

PIPE SIZE P	CODE NUMBER	INSERT LENGTH U	STEM LGTH A	SHANK DIA Q
3/4" NOMINAL (1.050" DIA.)	3/4"-SWS .385-U 2 1/2	2-1/2"	4"	49/64"
		4-1/2"	6"	49/64"
		7-1/2"	9"	49/64"
		10-1/2"	12"	49/64"
		13-1/2"	15"	49/64"
		16-1/2"	18"	49/64"
		22-1/2"	24"	49/64"
1" NOMINAL (1.315" DIA.)	1"-SWS .385 U 2 1/2	2-1/2"	4"	49/64"
		4-1/2"	6"	7/8"
		7-1/2"	9"	7/8"
		10-1/2"	12"	7/8"
		13-1/2"	15"	7/8"
		16-1/2"	18"	7/8"
		22-1/2"	24"	7/8"

STI MANUFACTURING, INC.

TEST WELLS

SERIES TW .260

SERIES TW .385

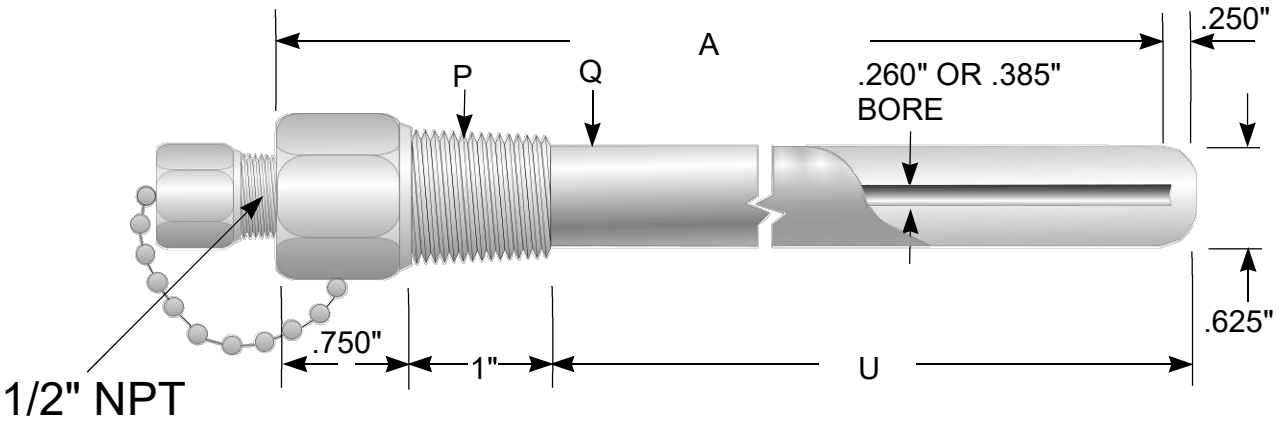

P = 1/2" NPT OR 3/4" NPT OR 1" NPT

TEST WELLS ARE MADE TO YOUR SPECIFICATIONS
WITH PLUG AND CHAIN

STI MANUFACTURING, INC.

VAN STONE THERMOWELLS

SERIES VS .260

SERIES VS .385

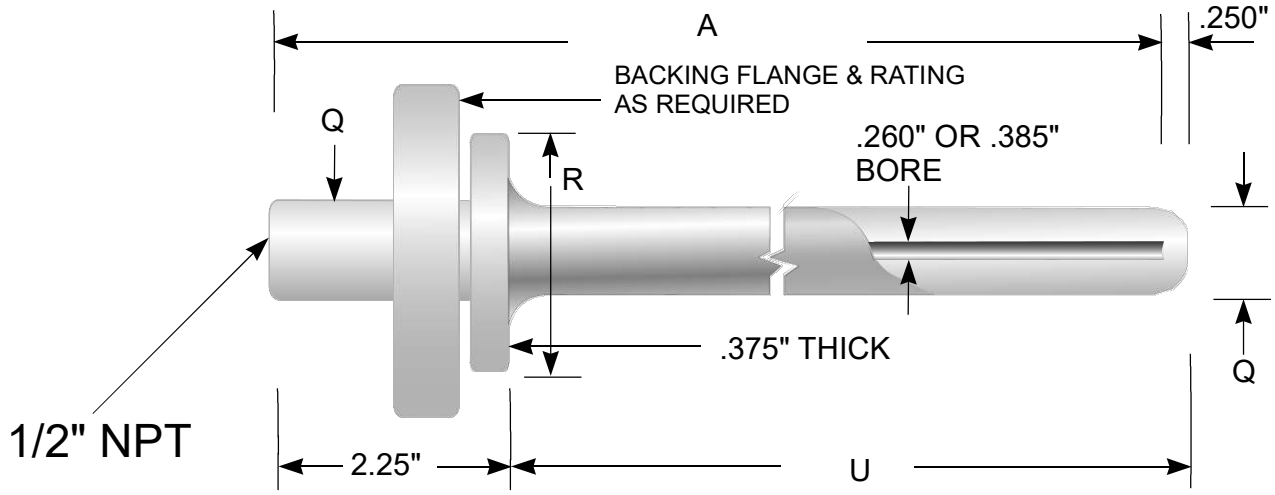

SPECIFY BACKING FLANGE IF NEEDED

EXAMPLE

SERIES VS .260

CODE NUMBER	INSERT LENGTH U	STEM LGTH A	SHANK DIA Q
VS .260-U 2	2"	4"	3/4"
	4"	6"	3/4"
	7"	9"	3/4"
	10"	12"	3/4"
	13"	15"	3/4"
	16"	18"	3/4"
	22"	24"	3/4"

SERIES VS .385

CODE NUMBER	INSERT LENGTH U	STEM LGTH A	SHANK DIA Q
VS .385-U 2	2"	4"	7/8"
	4"	6"	7/8"
	7"	9"	7/8"
	10"	12"	7/8"
	13"	15"	7/8"
	16"	18"	7/8"
	22"	24"	7/8"

OTHER DIMENSIONS		
PIPE SIZE NOMINAL	ACTUAL DIA. P	RAISED FACE DIA. R
1"	1.315"	2"
1 1/2"	1.900"	2.875"

STANDARD THREADED THERMOWELLS

SERIES WIH .260
SERIES WIHL .260
SERIES WIH .385
SERIES WIHL .385

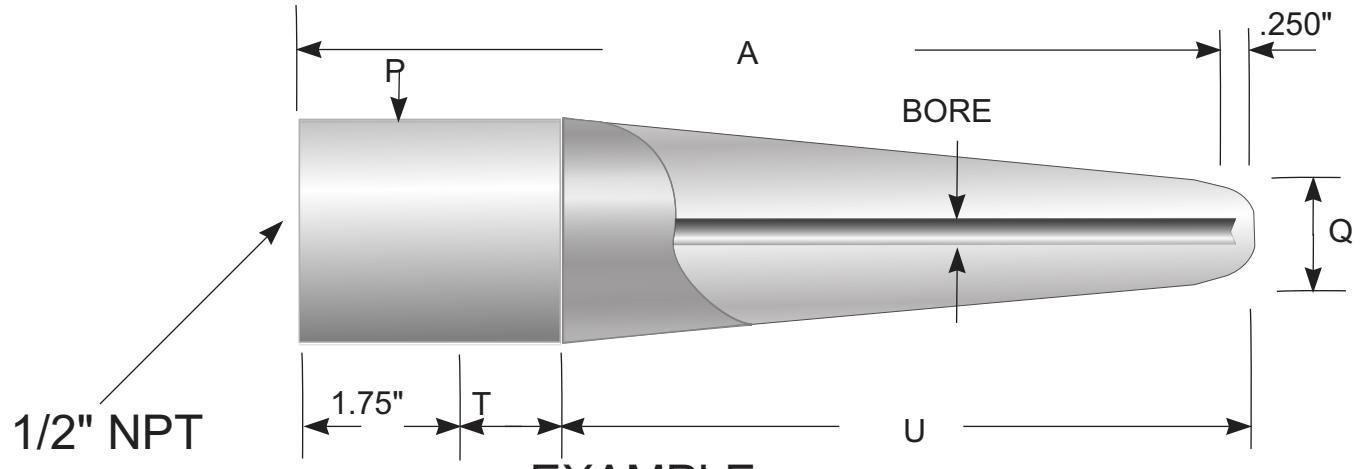

EXAMPLE

SERIES WIH .260

PIPE SIZE NOMINAL P	CODE NUMBER	INSERT LENGTH U	STEM LGTH A
3/4" WIH (1.050" DIA.) Q=.625"	3/4"-WIH .260-U 2 1/2	2-1/2" 4-1/2" 7-1/2" 10-1/2" 13-1/2" 16-1/2" 22-1/2"	4" 6" 9" 12" 15" 18" 24"
1" WIH (1.315" DIA.) Q=.625"	3/4"-WIH .260-U 2 1/2	2-1/2" 4-1/2" 7-1/2" 10-1/2" 13-1/2" 16-1/2" 22-1/2"	4" 6" 9" 12" 15" 18" 24"

SERIES WIHL .260

PIPE SIZE NOMINAL P	CODE NUMBER	INSERT LENGTH U	STEM LGTH A	LAG EXT. T
3/4" WIH (1.050" DIA.) Q=.625"	3/4"-WIHL .260-U 2 1/2	2-1/2" 4-1/2" 7-1/2" 10-1/2" 13-1/2" 16-1/2"	6 9 12 15 18 21	2 3 3 3 3 3
1" WIH (1.315" DIA.) Q=.625"	3/4"-WIHL .260-U 2 1/2	2-1/2" 4-1/2" 7-1/2" 10-1/2" 13-1/2" 16-1/2"	6 9 12 15 18 21	2 3 3 3 3 3

SERIES WIH .385

PIPE SIZE NOMINAL P	CODE NUMBER	INSERT LENGTH U	STEM LGTH A
3/4" WIH (1.050" DIA.) Q=.625"	3/4"-WIH .385-U 2 1/2	2-1/2" 4-1/2" 7-1/2" 10-1/2" 13-1/2" 16-1/2" 22-1/2"	4" 6" 9" 12" 15" 18" 24"
1" WIH (1.315" DIA.) Q=.625"	3/4"-WIH .385-U 2 1/2	2-1/2" 4-1/2" 7-1/2" 10-1/2" 13-1/2" 16-1/2" 22-1/2"	4" 6" 9" 12" 15" 18" 24"

SERIES WIHL .385

PIPE SIZE NOMINAL P	CODE NUMBER	INSERT LENGTH U	STEM LGTH A	LAG EXT. T
3/4" WIH (1.050" DIA.) Q=.625"	3/4"-WIHL .385-U 2 1/2	2-1/2" 4-1/2" 7-1/2" 10-1/2" 13-1/2" 16-1/2"	6 9 12 15 18 21	2 3 3 3 3 3
1" WIH (1.315" DIA.) Q=.625"	3/4"-WIHL .385-U 2 1/2	2-1/2" 4-1/2" 7-1/2" 10-1/2" 13-1/2" 16-1/2"	6 9 12 15 18 21	2 3 3 3 3 3

INTENTIONALLY LEFT BLANK

STI Manufacturing, Inc.

STI Manufacturing, Inc. provides thermowells for many environments that utilize many metal alloys. We also fabricate ceramic type thermowells for high temperature applications.

The ceramic material available are Alumina, Mullite, and Silicon Carbide. Each material is rated according to the temperature and strength requirements.

Metal alloy fittings can be machined and “cemented” to the ceramic thermowell for various installation requirements such as flanges or threads.

Thermowells manufactured from standard pipe are also available with optional process fittings, flanges, or threads.

INTENTIONALLY LEFT BLANK

STI MANUFACTURING, INC.

Due to the variety of instrumentation available, STI is unable to include all the information in our catalog. STI, however, wishes to supply our customers with the instrumentation of their needs. If you have any requests for instrumentation or, are in need of information of a particular brand, please contact your STI sales representative.

These are a few of the items STI can supply:

- **Transmitters**
- **Indicators**
- **Controllers**
- **Data Loggers**
- **Calibration Checkers**
- **Multi-meters**
- **Programmable Controllers**
- **Mini Handheld Indicators**

INTENTIONALLY LEFT BLANK

THERMOCOUPLES

Thermocouples operate on the principle that all metals have suspended electrons. When two dissimilar metals are joined at both ends and there is a temperature difference between the two junctions there is an electron flow. This phenomenon is known as EMF (Electro Motive Force).

All thermocouples are based at 32 degrees F. All thermocouples manufactured in the U.S.A. should be manufactured to N.I.S.T. standards. I.S.A., ANSI, and A.S.T.M. specifications differ slightly; however, all are based on N.I.S.T.

The method of how the measuring junctions are formed can affect the accuracy and the response time of the temperature. The three types of junctions are exposed, grounded, and ungrounded. The two most commonly used are the grounded and the ungrounded. The grounded version is where the element is welded to the end of the outer sheath. The grounded type has a faster response time but it is susceptible to R.F.I. This problem is sometimes solved by isolation in instrumentation. The ungrounded junction is formed by welding the element below the end of the thermocouple and covered with Mgo. The ungrounded junction has a slightly slower response time but is less likely to suffer from R.F.I.

The response time can also be affected by the outside diameter of the thermocouple, as the O.D. may be .500 to 0.010 with the smaller diameters able to respond in milliseconds.

Thermocouple accuracies are given in Table 2-Limits of Error and as, you can see, there are two tables given for the accuracy measurement. The first is Standard Limits and the second is Special Limits (sometimes called Premium Limits). In both Limits when the error is in %, the percentage applies to the temperature being measured, not the range. The difference between the two accuracies can be significant should the temperature be critical to safety. The user should be aware that it would be extremely unlikely for two thermocouples to give the exact reading at the same temperature (this applies to dual elements as well). Thermocouples can be calibration certified at known temperatures to determine the precise millivolt output at one or more temperatures, should high accuracy be desired.

Thermocouples are rugged and durable compared to other types of temperature sensors. Thermocouples will withstand extremely high temperatures than that of other types of sensors (when installed properly). However, thermocouples should be checked periodically for accuracy as under different conditions, the elements can deteriorate and, although a millivolt signal is apparent, it can be in error.

R.T.D.s

Resistance Temperature Detectors (R.T.D.s) use the principle that all metallic conductors exhibit electrical resistance. The value resistance of a given conductor changes with temperature given rise to a resistive Temperature Coefficient. The resistance change can be measured by traditional ohmmeter technique and the results may be interpreted in terms of temperature.

R.T.D.s are specified in terms of wire metal material, the base resistance, and the applicable curve or Temperature Coefficient. The most common materials used are Platinum, Nickel, and Copper. Platinum is the most commonly used metal in R.T.D.s and is referenced at 0 degrees C. Base resistances of 100, 200, 500, and 1000 ohms are most common. Nickel is referenced at 0 degrees C with 120 ohms as the most common. Copper is referenced at 25 degrees C with 10 and 100 ohms being the most commonly used base references.

R.T.D.s have demonstrated extremely good accuracy in terms of temperature. Drift rates of less than 0.04% in 15,000 hours at 650 degrees C have been demonstrated.

The user must use caution when ordering R.T.D.s as to the different standards that R.T.D.s can be fabricated. There are many standards such as DIN, SAMA, BIS, JIS, and ASTM. The R.T.D. sensor must match the instrument used to measure the temperature reading to ensure accurate results.

ASTM has established a table to determine the accuracy of R.T.D.s in 2 grades (see TABLE below).

In order to obtain the best results with your R.T.D., you must give other factors consideration such as temperature, vibration, and wiring, as any one of these conditions can affect your final reading.

Temperature in Degree C	Grade A 100.00 ohm Platinum R.T.D.		Grade B 100.00 ohm Platinum R.T.D.	
	(deg. C)	Ohm	(deg. C)	Ohm
-200	0.47	0.20	1.1	0.47
-100	0.30	0.12	0.67	0.27
0	0.13	0.05	0.25	0.10
100	0.30	0.11	0.67	0.25
200	0.47	0.17	1.1	0.40
300	0.64	0.23	1.5	0.53
400	0.81	0.28	1.9	0.66
500	0.98	0.33	2.4	0.78
600	1.15	0.37	2.8	0.88
650	1.24	0.40	3.0	0.94

Table represents 3 & 4 wire R.T.D.s only.
To convert tolerance deg. C to deg. F, multiply by 1.8.
Table represents 100 ohm Platinum R.T.D.s on the DIN curve.

STI MANUFACTURING, INC.

Thermocouple Selection Data
Table 1

Type of Thermocouple or Wire & Material	Wire Gauge (AWG)	Recommended Temperature Limits Deg. F	Recommended Conditions For Use
Type E Chromel + Constantan -	8 AWG 14 AWG 20 AWG	0 to 1600 0 to 1400 0 to 1200	**Type E** thermocouples suitable for use at temperatures up to 1600 deg. F in vacuum of inert, mildly oxidizing or reducing atmosphere. Not subject to corrosion at cryogenic temperatures. Has highest EMF output per degree of all commonly used thermocouples.
Type J Iron + Constantan -	8 AWG 14 AWG 20 AWG	0 to 1400 0 to 1100 0 to 900 0 to 700	**Type J** is used with or without protective tubing where deficiency of free oxygen exists. Protective tube recommended but not essential, desirable for cleanliness and longer service. Since the iron wire oxidizes rapidly above 1000 degrees F, compensate by using gauge wires.
Type K Chromel + Alumel -	8 AWG 14 AWG 20 AWG 24 AWG	0 to 2300 0 to 2000 0 to 1800 0 to 1600	**Type K** is used extensively at temperatures up to 2300 degrees F. Not recommended for use in: (1) reducing atmospheres or alternately oxidizing, reducing unless suitably protected with protection tubes. (2) Sulphurous atmospheres unless properly protected. (3) Vacuum, except for short period of time (4) Atmospheres that promote “green-rot”
Type R Plat./Rhod. 13% + Platinum	24 AWG	to 2700	**Type R** is used for high temperature applications in oxidizing or inert atmospheres. **Type B** reduces effects of chemical contamination and rhodium migration and has greater strength than **Types S or R**. Use protection tubes to obtain maximum reliability above 1830 degrees F in a neutral atmospheres or above 2190 degrees F.
Type S Plat./Rhod. 10% + Platinum –	24 AWG	to 2700	
Type B Plat./Rhod. 30% + Plat.Rhod. 6% -	24 AWG	to 3150	
Type T Copper + Constantan –	14 AWG 20 AWG 24 AWG	-300 to + 700 -300 to + 500 -300 to + 400	**Type T** is used in either oxidizing or reducing atmospheres. Stable at lower temperatures. Superior for a wide variety of uses in low cryogenic temperatures.

STI MANUFACTURING, INC.

Tolerances on Initial Values of Emf vs. Temperature for Thermocouples

Tables referenced from ASTM 14.03 1997 Edition E230 page 108

Table 2 **Limits of Error**

Tolerances-Reference Junction 0 Deg. C (32 Deg. F)

Temperature Range			Standard		Special	
Type	**Deg. C**	**Deg. F**	**Deg. C** (whichever is greater)	**Deg. F**	**Deg. C** (whichever is greater)	**Deg. F**
T	0 to 370	32 to 700	±1 or ±0.75%	Note 2	±0.5 or ±0.4%	Note 2
J	0 to 760	32 to 1400	±2.2 or ±0.75%		±1.1 or ±0.4%	
E	0 to 870	32 to 1600	±1.7 or ±0.5%		±1 or ±0.4%	
K or N	0 to 1260	32 to 2300	±2.2 or ±0.75%		±1.1 or ±0.4%	
R or S	0 to 1480	32 to 2700	±1.5 or ±0.25%		±0.6 or ±0.1%	
B	870 to 1700	1600 to 3100	±0.5%		±0.25%	
T*A*	-200 to 0	-328 to 32	±1 or ±1.5%		*B*	
E*A*	-200 to 0	-328 to 32	±1.7 or ±1%		*B*	
K*A*	-200 to 0	-328 to 32	±2.2 or±2%		*B*	

A Thermocouples and thermocouple materials are normally supplied to meet the tolerances specified in the table for temperatures above 0 Deg. C. The same materials however, may not fall within the tolerances given for temperatures below Deg. C in the second section of the table. If materials are required to meet the tolerances stated for temperatures below 0 Deg. C the purchase order must so state. Selection of material usually will be required.
B Special tolerances for temperatures below 0 Deg. C are difficult to justify due to limited available information. However, the following values for Types E and T thermocouples are suggested as a guide for discussion between purchaser and supplier:

Type E –200 to 0 Deg. C ± 1 Deg. C or ± 0.5% (whichever is greater)
Type T –200 to 0 Deg. C ± 0.5 Deg. C or ± 0.8% (whichever is greater)

Initial values of tolerance for Type J thermocouples at temperatures below 0 Deg. C and special tolerances for Type K thermocouples below 0 Deg. C are not given due to the characteristics of the materials.

Note 1 – Tolerances in this table apply to new essentially homogeneous thermocouple wire, normally in the size range 0.25 to 3mm in diameter (No. 30 to No. 8 Awg.) and used at temperatures not exceeding the recommended limits. If used at higher temperatures these tolerances may not apply.
Note 2 – The Fahrenheit tolerance is 1.8 times larger than the Deg. C tolerance at the equivalent Deg. C temperature. Note particularly that percentage tolerances apply only to temperatures that are expressed in Deg. C.
Note 3 – *Caution:* Users should be aware that certain characteristics of thermocouple material, including the emf versus temperature relationship, may change with time in use; consequently, test results and performance obtained at time of manufacture may not necessarily apply throughout an extended period of use. Tolerances given in this table apply only to new wire as delivered to the user *and do not allow for changes in characteristics with use*. The magnitude of such changes will depend on such factors as wire size, temperature, time of exposure, and environment. It should be further noted that due to possible changes in homogeneity, attempting to recalibrate *used* thermocouples is likely to yield irrelevant results, and is not recommended. However, it may be appropriate to compare used thermocouples *in-situ* with new or known good ones to ascertain their suitability for further service under the conditions of the comparison.

INSULATION CONSTRUCTION DETAILS & CHARACTERISTICS

STI Catalog Series	Primary/ Secondary Insulations	Temp. Range Continuous/Single Reading (F)	ANSI Color Coded	Physical Properties	
				Abrasion Resistance	Moisture Resistance
THERMOCOUPLE WIRE					
302	Glass/Glass	900/1000	YES	GOOD	GOOD
304	**Glass/Glass**	**900/1000**	**YES**	**FAIR**	**GOOD**
305	Glass/Glass	900/1000	YES	FAIR	GOOD
307	**TEF/Glass/Glass**	**900/1000**	**YES**	**GOOD**	**EXCELLENT**
313	Glass/Glass	900/1000	YES	GOOD	GOOD
314	**Glass/Twisted**	**1300/1600**	**YES**	**GOOD**	**GOOD**
315	Glass/Twisted	900/1000	YES	GOOD	GOOD
321	**Glass/Glass**	**1300/1600**	**YES**	**GOOD**	**GOOD**
505	PVC/Ripcord	-20 to +221 cont.	YES	GOOD	EXCELLENT
507	**FEP/FEP**	**400/500**	**YES**	**EXCELLENT**	**EXCELLENT**
508	TFE/TFE	500/600	YES	GOOD	EXCELLENT
509	**FEP/Shield/FEP**	**400/500**	**YES**	**EXCELLENT**	**EXCELLENT**
511	Kapton/Twisted	600/800	TRACER	EXCELLENT	EXCELLENT
512	**Kapton/Kapton**	**600/800**	**TRACER**	**EXCELLENT**	**EXCELLENT**

151	**ServTex/ServTex**	**550/650**	**YES**	**EXCELLENT**	**FAIR**
153	TFE/ServTex/ServTex	550/650	YES	EXCELLENT	EXCELLENT
303	**Glass/Glass**	**900/1000**	**YES**	**FAIR**	**GOOD**
401	PVC/Cotton	190 cont.	YES	GOOD	EXCELLENT
502	**PVC/PVC**	**-20 to +221 cont.**	**YES**	**GOOD**	**EXCELLENT**
503	PVC/Cotton/PVC	-20 to +221 cont.	YES	GOOD	EXCELLENT
510	**PVC/Shield/PVC**	**-20 to +221 cont.**	**YES**	**GOOD**	**EXCELLENT**
515	Tefzel/Tefzel	300/400	YES	EXCELLENT	EXCELLENT
900	**PVC/Twisted/Shield/PVC**	**-20 to +221 cont.**	**YES**	**GOOD**	**GOOD**

14255 Hooper Ranch Rd., WILLIS, TX. 77378 (281) 363-1019 (936) 856-5541 FAX (936) 856-4207